M16C Platform

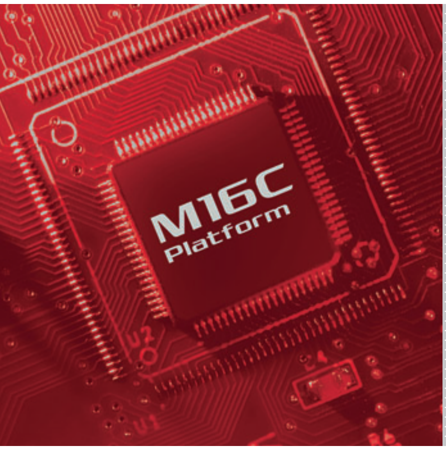

M16C™ Family of Microcontrollers

R8C • M16C • R32C

2008.9

Everywhere you imagine. RENESAS

TABLE OF CONTENTS

Family Overview 2

Top Reasons to Select M16C 4

On-chip Peripherals 12
- Highly Functional Timers . . .12
- A/D Converter 12
- Data Flash & BGO 13
- High-precision, High-speed On-chip Oscillator 13
- Serial Interface 14
- I²C Bus Interface 14
- Intelligent I/O 15
- On-board LCD Controller . . . 15

Development Tools 16
- IDE Overview 16
- IDE Features 17
- Debugging Software 18
- Flash Programming 18
- Debugging Hardware 19
- ICE Comparison Table 20
- E30A Trace Emulator 21
- Third-party Support 21
- Rapid Evaluation 22
- Tool Selector 24
- ICE Selection Guide 25

Device Selection 26
- R8C/2x, 3x Series 26
- R8C/Lx Series 30
- M16C/Tiny Series 32
- M16C/6x Series 34
- R32C Series 36
- MCUs for CAN Applications 38

Appendices 40
- Appendix A: Part Number Decoders 40
- Appendix B: Abbreviations . . . . . Back Flap
- Appendix C: Package Specifications . . . . . Back Flap

Everywhere you imagine. RENESAS

- **One of the world's leading IDTM (Integrated Device and Technology Manufacturer) companies serving the global market**
- **In-house manufacturing capability for advanced process nodes — 90, 65 and 45 nm**
- **Complete System-Level Solutions** in all core segments (automotive, mobile, consumer, industrial and PCs), with the right mix of technology such as networking (wired/wireless), security, low power and analog/RF interface capabilities, plus full-scale development support
- **Proven credibility based on more than 30 years of experience**
  - — "Zero Defects" as the objective
  - — Compliance with international standards such as ISO/TS 16949
  - — High quality, tested and proven by customers (automotive electronics)
  - — Commitment to safety and protection of environment

#1
Renesas is the World's largest MCU supplier with over 21% market share*

Renesas — Your Best Decision for Microcontrollers and Microprocessors

Choose for your next design; use for all your future ones.

Renesas Technology, the #1 global supplier of microcontrollers, offers hundreds of devices in our M16C™, H8®, and SuperH® families, among others, that have solid technology roadmaps and cover wide spans of performance, integration, power efficiency and price points. Our advanced silicon solutions simplify system optimizations, facilitate design enhancements and diversifications, and help you meet tight cost budgets. You can shorten your system design cycles and improve your time-to-market by taking advantage of our total system support, which includes starter kits, HW/SW tools, reference designs/platforms, example software code, and middleware. Expert third-party support is available as well.

---

* According to Gartner Dataquest, March 2008

IMPORTANT!
- This document may, wholly or partially, be subject to change without notice.
- All rights are reserved: No one is permitted to reproduce or duplicate, in any form, the whole or part of this document without the express permission of Renesas Technology America, Inc.
- Renesas will not be held responsible for any damage to the user that may result from accidents or any other reasons during the operation of the user's unit according to this document.
- Circuitry and other examples described herein are meant merely to indicate the characteristics and performance of Renesas semiconductor products. Renesas assumes no responsibility for any intellectual property claims or other problems that may result from applications based on the examples described herein.
- No license is granted by implication or otherwise under any patents or other rights of any third party or Renesas Technology Corp.
- MEDICAL APPLICATIONS:

  Renesas products are not authorized for use in MEDICAL APPLICATIONS without the written consent of the appropriate officer of Renesas' sales company. Such use includes, but is not limited to, use in life support systems. Buyers of Renesas products are requested to notify the relevant Renesas sales officers when planning to use the products in MEDICAL APPLICATIONS.

Renesas Microcontroller Solutions: H8® Family, M16C™ Family, SuperH® Family, and Rx Family

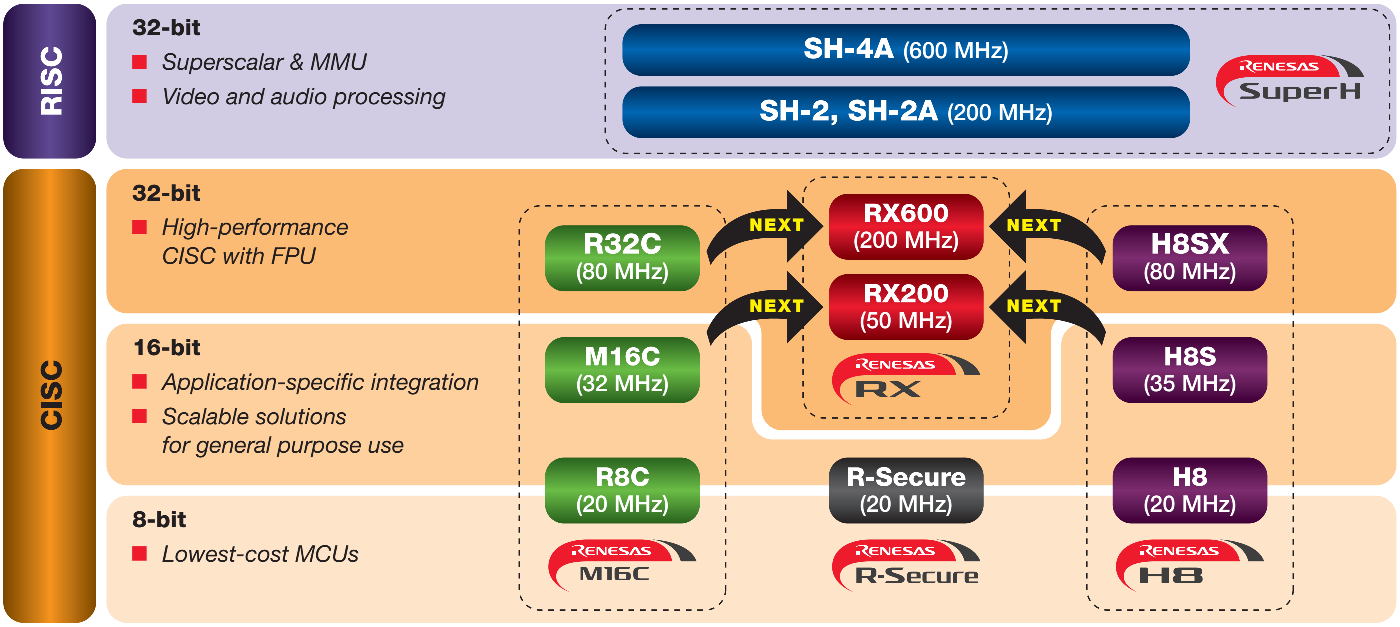

Long-term customer support programs — Renesas Ecosystem

Samples

- Get a first-hand look at our products. Let us know your needs, and we'll get some samples out to you. America.Renesas.com/Samples

Alliance Partner Program

- The Alliance Partner Program allows you to connect instantly with hundreds of qualified design consulting and contracting professions. America.Renesas.com/Alliance

Renesas Interactive

- Gain the technical knowledge you need. Evaluate, research, and learn Renesas microcontrollers and tools at your own pace, where you want, when you want, and always for free. RenesasInteractive.com

Renesas University

- For educators and students. Get published. Teach with professional grade tools. Learn MCUs with a modern architecture. RenesasUniversity.com

My Renesas

- Customize your data-retrieval needs on the Renesas website. You'll receive updates on the products that you're interested in. America.Renesas.com/MyRenesas

RenesasRulz

RenesasRulz.com Think it. Build it. Post it.

- A community site and gathering place for technical information and those who use Renesas microcontrollers and microprocessors. RenesasRulz.com

Why choose Renesas?

#1 MCU Reach Further

- Renesas is one of the largest semiconductor companies in the world, and the #1 supplier of microcontrollers worldwide.
- Renesas microcontrollers feature modern architectures implemented in ranges of popular device families designed to suit virtually every type of embedded application.
- Renesas is totally committed to the embedded systems market globally and has developed and continues to enhance and expand its own microcomputer IP.
- Renesas provides world-class support to its customers, including the Renesas Alliance Partner Program, which is tiered to suit the voluntary participation of program members.
- Renesas establishes, nurtures, and values long-term business relationships based on performance, trust, and mutual success and satisfaction.

Make Renesas your next choice! Visit America.Renesas.com

For product selection assistance, click Purchasing Info link.

For technical questions, click Technical Support link.

The M16C Family Evolution

High-speed

R32C/100 Series

- R32C/121, R32C/120 ★
- R32C/134, R32C/133 ★
- R32C/161, R32C/160 ★
- R32C/111 ★ → R32C/118, R32C/117, R32C/116 ★
  - Compatibility and continuity, higher speed [50MHz]
  - Enhanced communication functions (Serial Interface: 9ch)
- R32C/157, R32C/156, R32C/153, R32C/152, R32C/151 ★★ → R32C/1xx ☆
  - Compatibility and continuity, higher speed [64MHz]
  - Enhanced communication functions (FlexRay®, CAN-Multi ch, Hardware LIN)

M32C/80 Series

- M32C/84
- M32C/85
- M32C/87

Full-32-bit, Higher speed (to R32C/100 Series)

M32C/87 → M32C/8B ★★
- On-chip large-capacity flash memory (Max.1MB)
- Enhanced peripheral functions (On-chip CAN)

Standard

M16C/60 Series

- M16C/62P → M16C/64 ★, M16C/65 ★ → M16C/6C ★
  - M16C/62P: Enhanced lineup of memory options; Numerous peripheral functions
  - M16C/64, M16C/65: Compatibility and continuity, higher speed [25 to 32MHz]; Faster A/D converter, enhanced peripheral functions
  - M16C/6C: Enhanced peripheral functions (On-chip USB)

M16C/30 Series

- M16C/30P → M16C/63 ★★
  - M16C/30P: Optimized peripheral functions, enhanced cost effectiveness
  - M16C/63: Low voltage operation (at 1.8V)

Compact

M16C/Tiny Series

- M16C/26A
- M16C/28
- M16C/29

M16C/26B, M16C/28B: High speed (24MHz)
M16C/29: Enhanced peripheral functions (on-chip CAN)

→ M16C/5L, M16C/5M (Automotive) ★
- High reliability
- Higher speed (32MHz)
- Enhanced peripheral functions

R8C/3x Series

- R8C/3x ★★

R8C/Lx Series

- R8C/LX ★★

R8C/2x Series

- R8C/2x → R8C/2E, 2F, R8C/2G, 2H, 2J, R8C/2K, 2L ★
  - High speed on-chip oscillator
  - Support 64, 80pin: R8C/2A to 2D

★:New Product
★★:Under Development
☆:In Planning Stage

The M16C Family is a complete development platform in all respects.

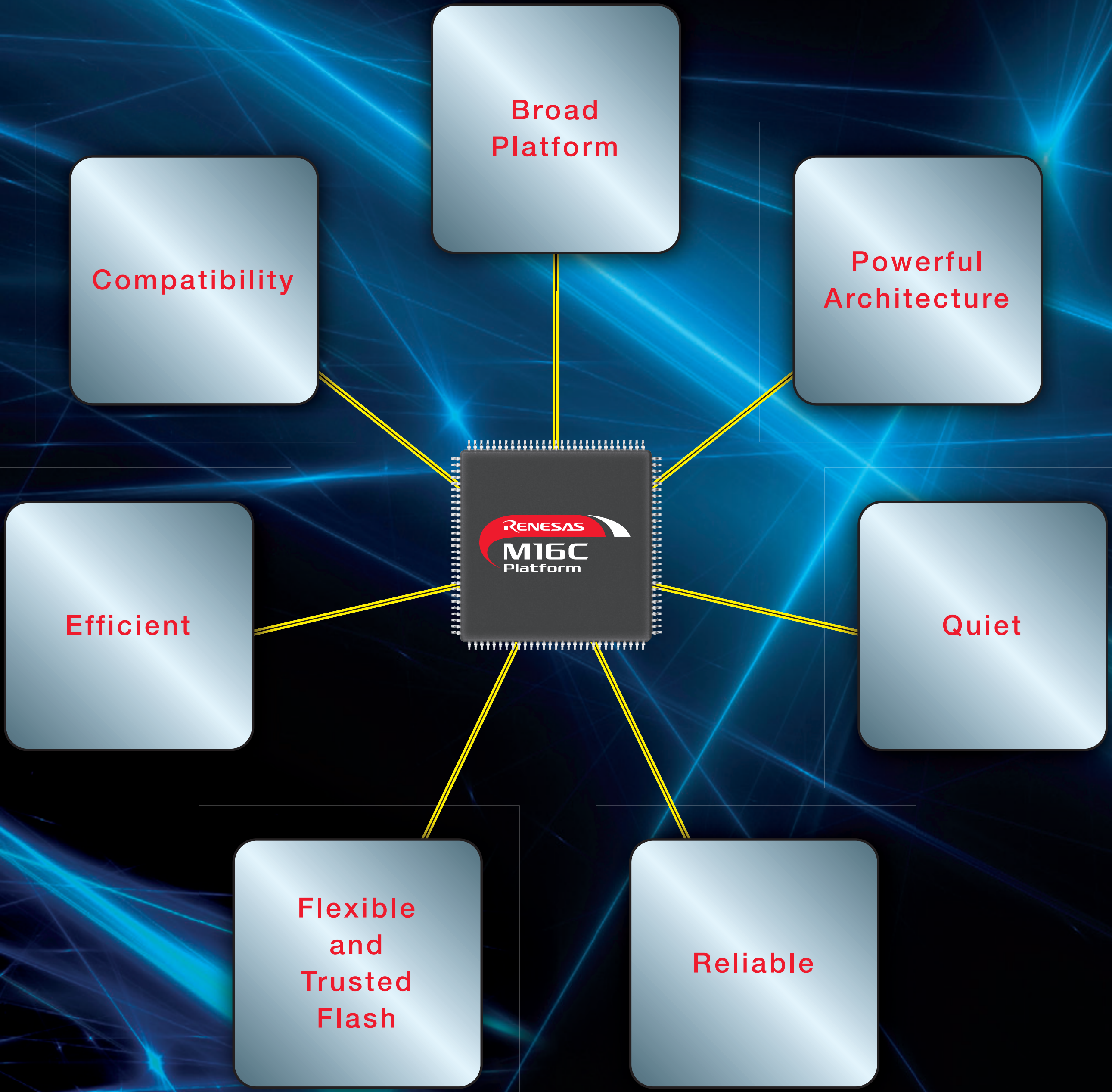

The M16C Family solves design issues that traditionally affect MCUs, while reducing total system costs and supporting a wide range of applications.

REASON #1: BROAD PLATFORM

M16C Platform: Fully Upward Compatible

The M16C MCU platform offers comprehensive scalability with a variety of products to meet different levels of performance and integration — from the cost-sensitive R8C Series to the high-performance R32C/100 Series. Designers can add features to products simply by moving up to the next M16C group while maintaining full software compatibility. Similarly, they can scale down designs by choosing products with fewer features, minimizing development cycles and meeting production costs.

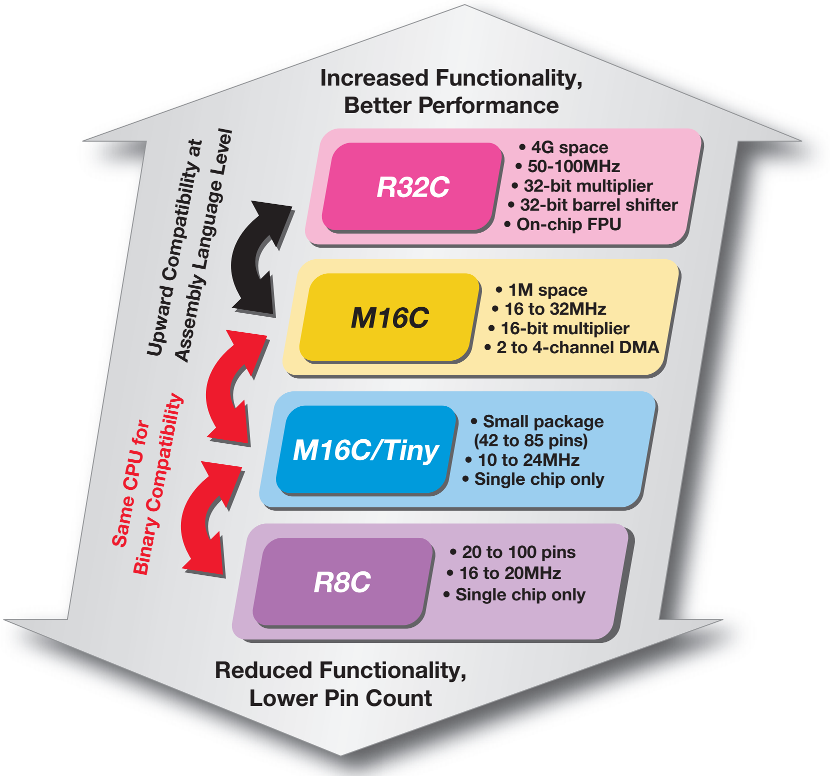

M16C Platform: Broad MCU Selection

The M16C family is comprised of hundreds of different MCUs, all based on the same core platform. Choices ranging from 20 pins and 2KB of Flash to 144 pins and 1MB of Flash, with many options in between, let designers select the best device to fit their application requirements.

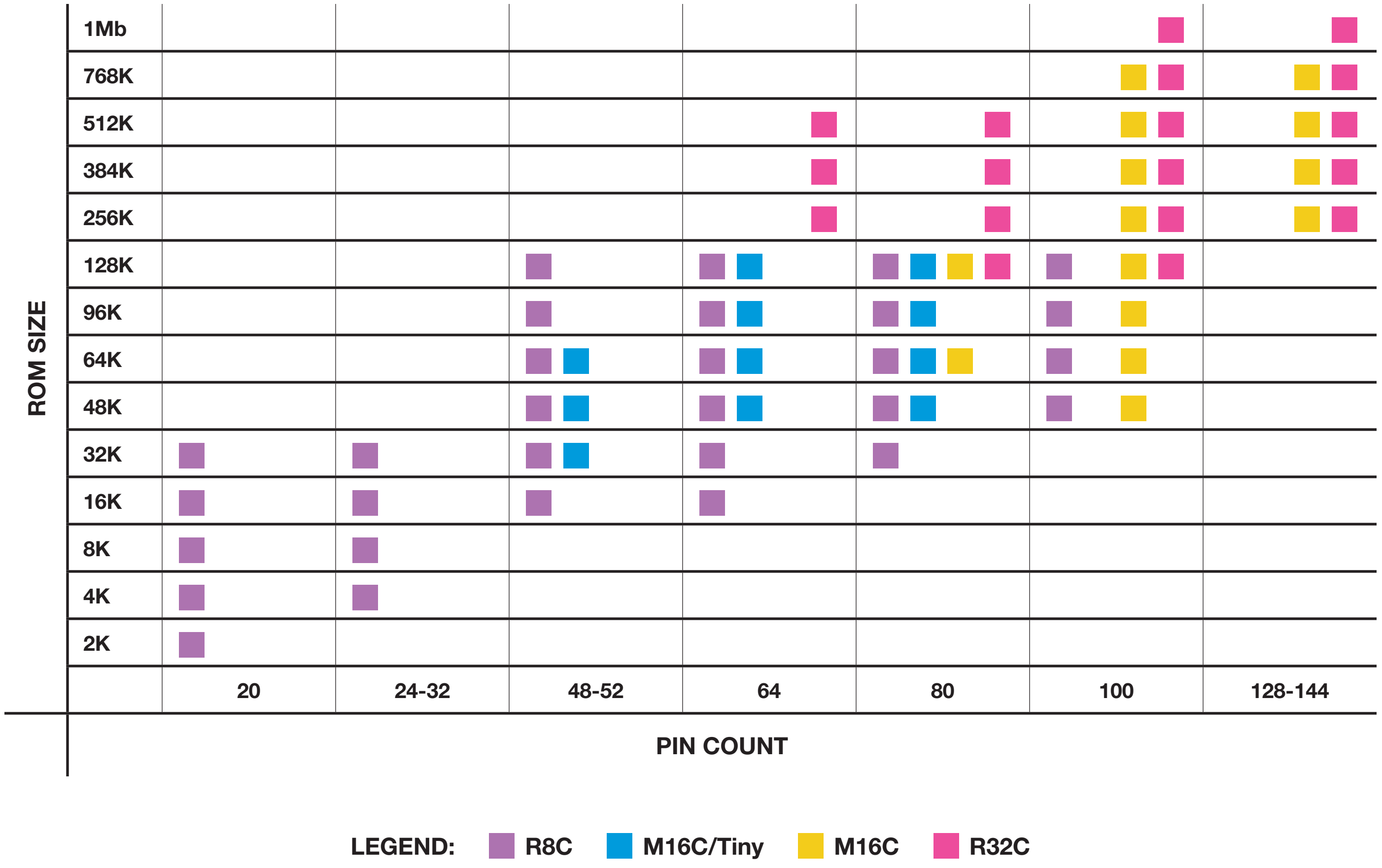

REASON #2: COMPATIBILITY

Pin-Compatible

The products in the M16C Family are pin compatible, so there is almost no need for wiring changes on the board when switching to newer versions or changing to different MCUs within the same family.

Example of One Side of Device

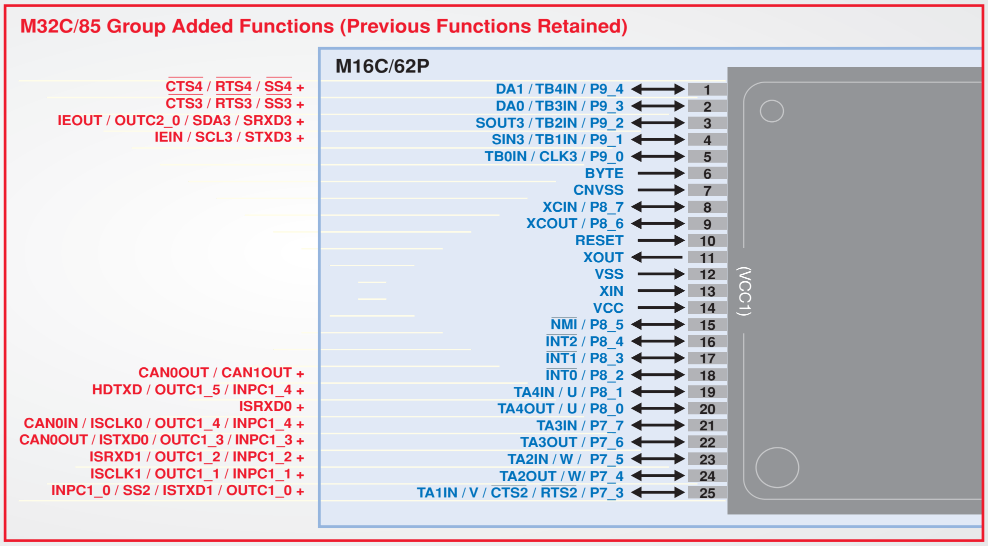

Compatible Peripheral Functions

Products in the M16C Family have compatible CPU cores and peripheral functions.

As new devices are introduced, the base peripheral set is maintained and new functions are added for higher integration.

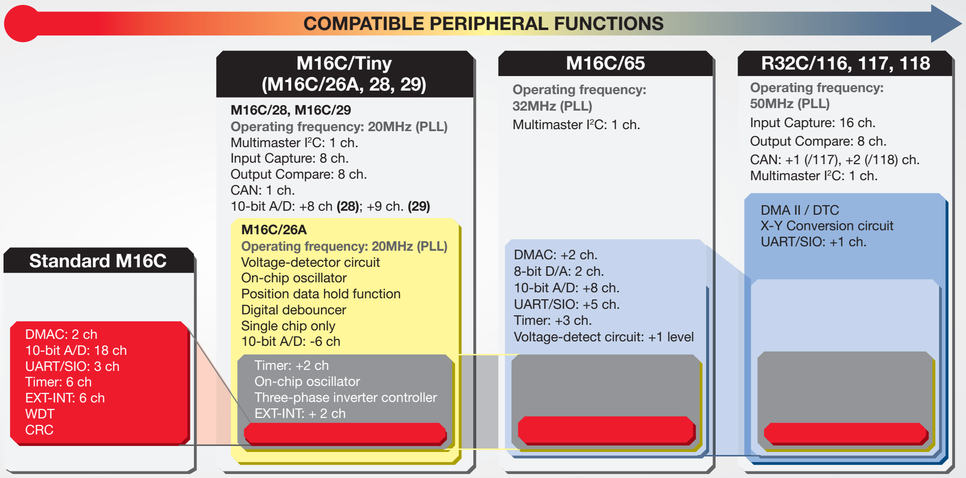

Refer to selector guide for detailed specifications

Advantages of Compatibility

Pin compatibility and peripheral function compatibility minimize the need for changes to the board design or software.

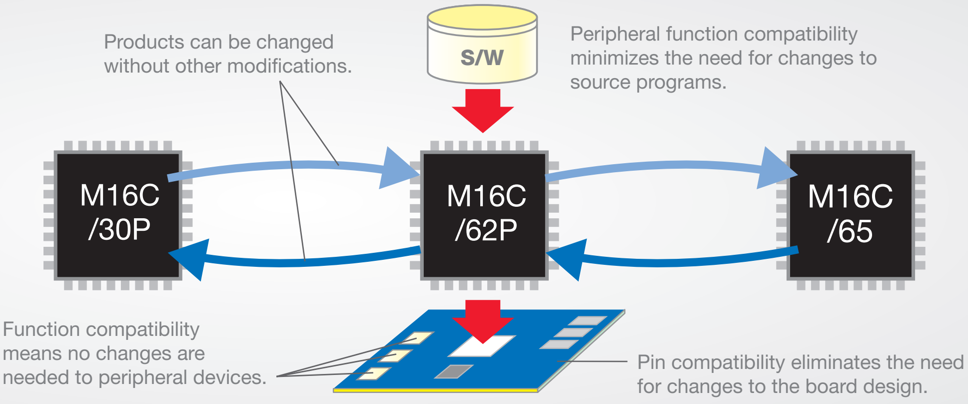

■ REASON #3: POWERFUL ARCHITECTURE

R32C/M32C Register Model

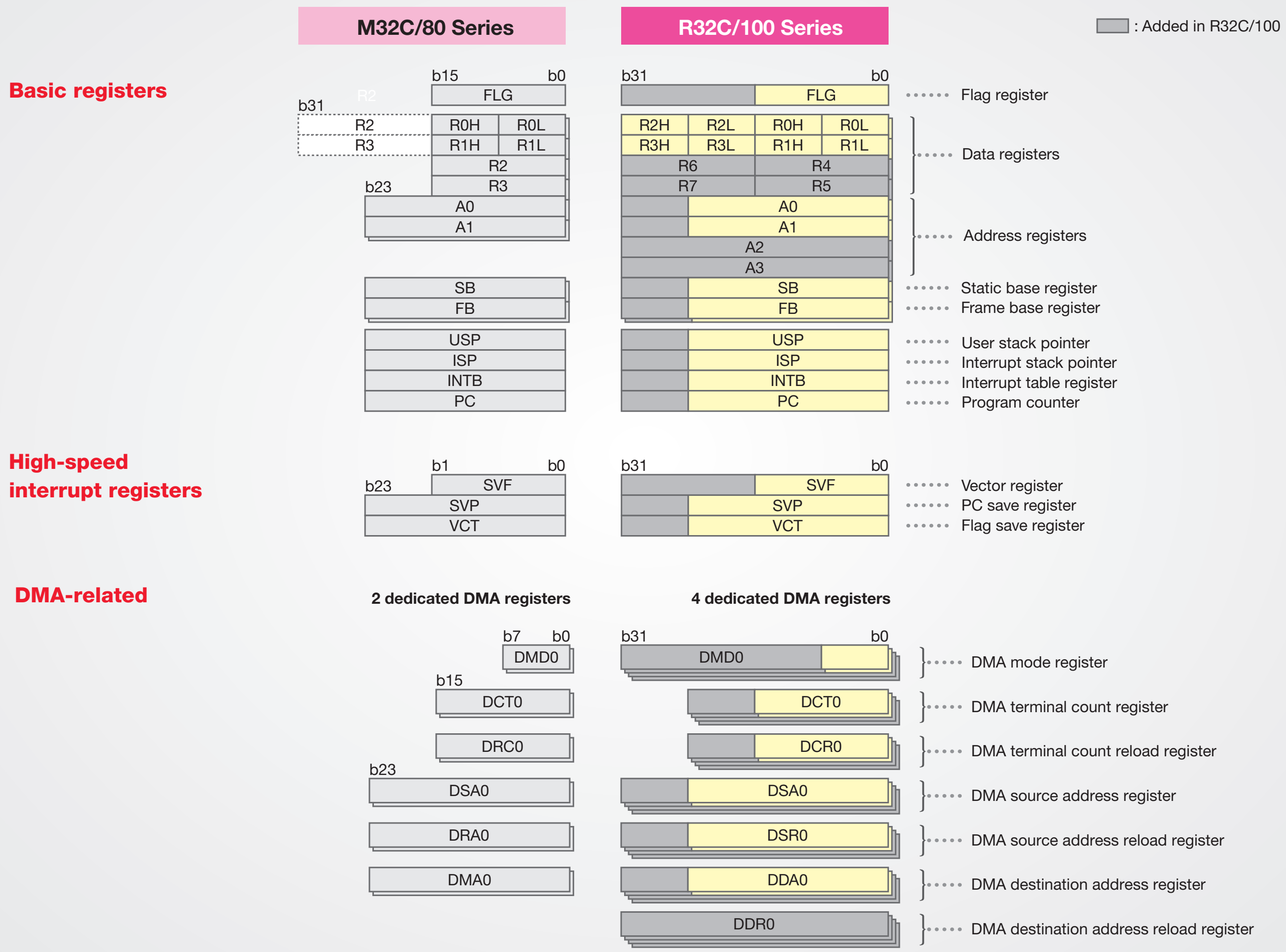

DMA Function

DMA, which transfers data without CPU intervention, supports up to four channels. The DMA-II/DTC function provides many other memory transfer capabilities, such as transfer of multiple bytes by a single event and transfer of data to multiple addresses by a single event (M32C/80 core, R32C/100 core).

DMA Applications

- Automatic serial I/O transfers
- Motor drive using microsteps
- Multichannel PWM output (max. 64)

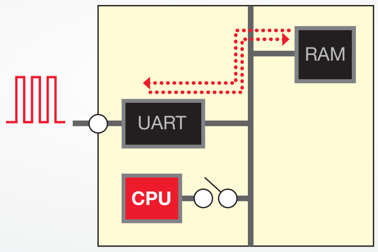

DMA-II / DTC Applications

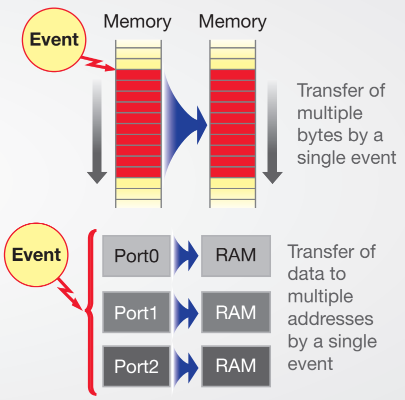

Top Reasons to Select the **M16C Platform**™

R32C CPU Core Pipeline

The number of pipeline stages has been increased from three (previous version) to five to boost processing speed.

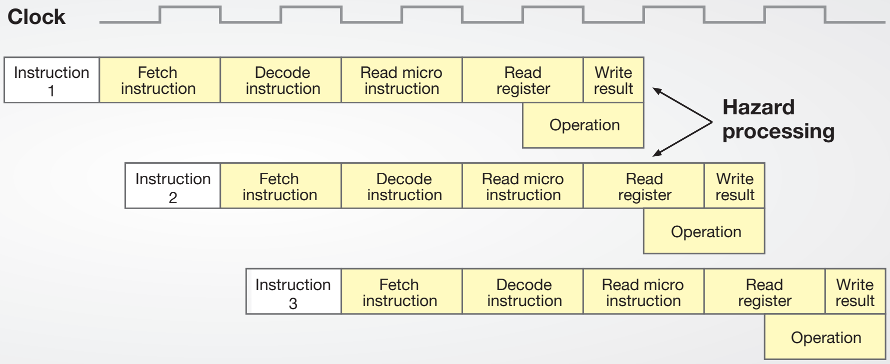

High-Speed Interrupt Processing (R32C/M32C)

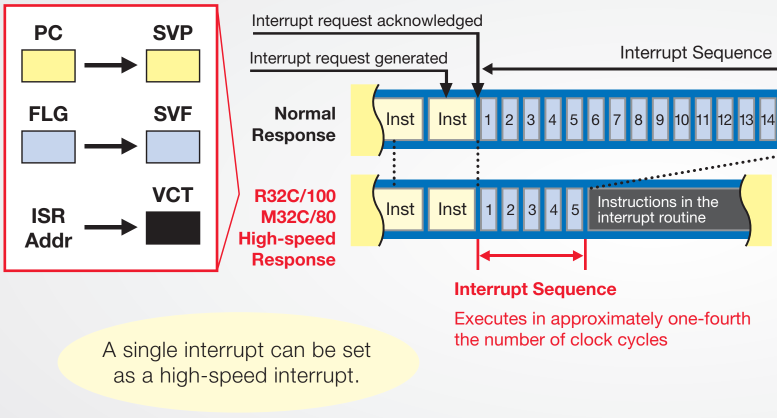

*The interrupt return instruction requires three cycles (one-half that required by the M16C). Other interrupt sequences use 14 cycles on the R32C/100 and M32C/80.

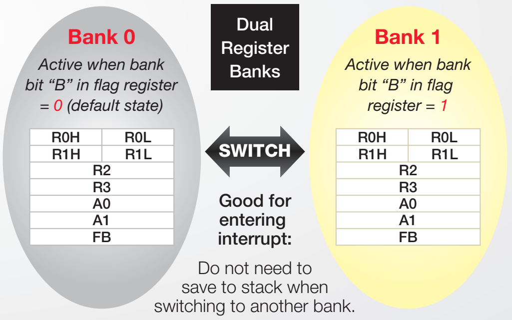

Floating Point Instructions (R32C)

The R32C incorporates a single-precision 32-bit FPU inline and supports floating point instructions.

Instruction set

- CNVIF: Convert integer → floating point number
- ROUND: Convert floating point number → integer
- ADDF: Floating point add
- SUBF: Floating point subtract
- MULF: Floating point multiply
- DIVF: Floating point divide
- CMPF: Floating point compare

Rounding modes

- Round to nearest value
- Round towards zero
- Round towards negative infinity

Exception processing

- Illegal input
- Overflow
- Underflow

Data format (single-precision floating point number)

32 bits

Sign (1 bit)	Exponent (8 bits)	Mantissa (23 bits)

$(-1)^{sign} \times 2^{exponent-127} \times (1 + mantissa)$

Supported numeric values
- Normalized numbers: 0 < exponent < 255
- Zero: 0 and mantissa = 0

Unsupported numeric values
- Not a number (Nan): Exponent = 255 and mantissa ≠ 0
- Infinity: Exponent = 255 and mantissa = 0
- Subnormal numbers: Exponent = 0 and mantissa ≠ 0

REASON #4: EFFICIENT

Multiple Clock Sources and Multiple Power-Saving Modes

The M16C is ideal for portable devices because it has multiple clock sources and multiple power-saving modes.

Multiple Clock Sources:

- Main clock oscillator
- Sub-clock oscillator
- On-chip oscillators
- External clock

Multiple Power-saving Modes:

- Main clock can be slowed down
- Processor can be put to sleep
- Processor and/or peripherals can be driven by 32kHz sub-clock
- Peripherals can be individually powered down
- All clocks can be turned off for the lowest possible power draw

Clock Generator Circuitry (R8C/2x)

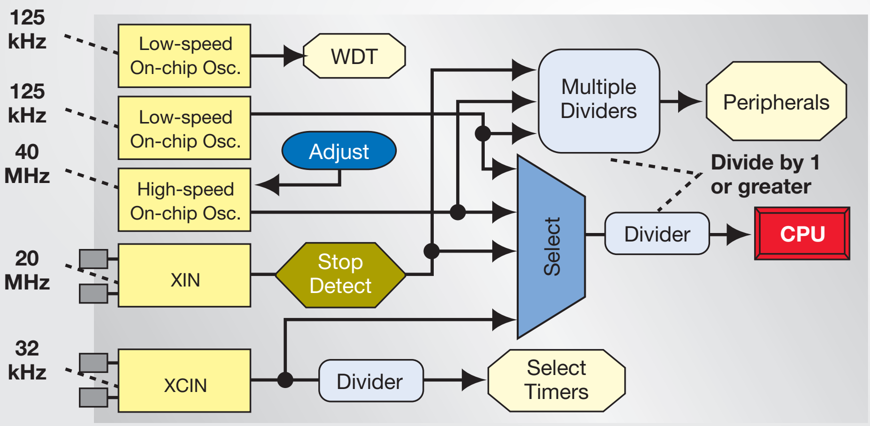

ADC Vref Cut-off

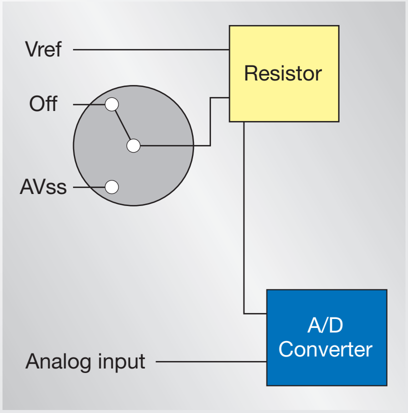

Extensive Power Management

- Independent clock signal selection for CPU and peripherals provides great flexibility for performance and power management
- Low-voltage operation down to 2.2V reduces current consumption while maintaining a high level of performance
- Peripherals such as the ADC can be physically disconnected from the power path for lowest power drain

Power-Down Modes (R8C/2x @ 5V)

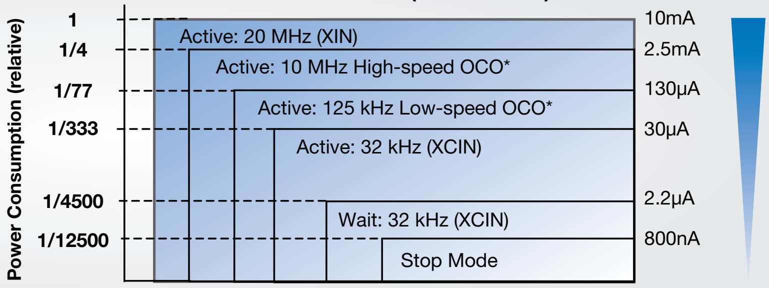

* OCO = On-chip Oscillator

Load Capacitance Reduction By Optimized Bi-directional Bus

Load capacitance is distributed by using separate buses, thereby reducing the power loss caused by charging and discharging. In addition, the reduced load capacitance allows increases in bus operating speeds.

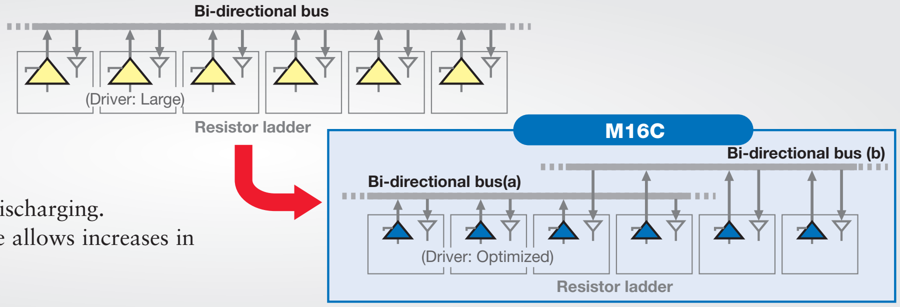

REASON #5: QUIET

Excellent EMI and EMS Performance

The M16C family of MCUs incorporates various design techniques that help minimize EMI and EMS effects. Innovative layout schemes and built-in components make the M16C robust and can significantly reduce the total system cost by eliminating external filter circuits (e.g., decoupling capacitors) typically needed by conventional MCUs.

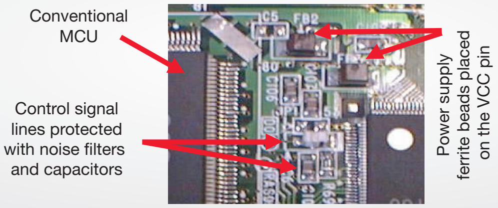

Conventional MCU-based circuit board

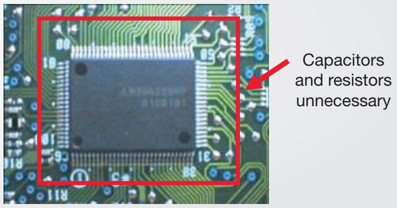

M16C-based circuit board

Low Noise Emissions

M16C MCU devices are designed to minimize switching noise, improving EMI performance. The clock driving circuit can be configured for high- or low-level drive according to the system crystal. Internal oscillators also help reduce the overall noise emission. Port-output buffers have been tuned to drive at the appropriate voltage levels and switching timing is controlled to minimize current spiking.

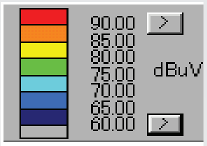

Comparison of Noise Emissions (Field Probe Test)

M16C/62P
Supply voltage: 5V
Oscillation frequency: 24MHz (PLL)

Conventional MCU
Supply voltage: 5V
Oscillation frequency: 20MHz (PLL)

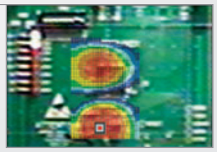

High Immunity to Noise

All input pins include Schmitt trigger, RC circuits and clamp diodes, providing analog filtering and protection for all external signals. For functions such as input capture, additional digital filters are implemented.

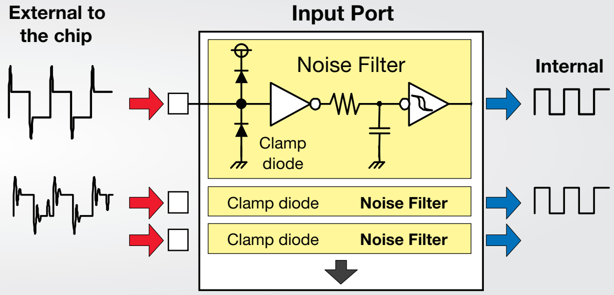

Innovative Chip Layout Reduces Noise

Location of Vcc and Vss pins is optimized for best effect of bypass capacitor. Internal parasitic capacitors provide further protection against noise. Layout of MCU's supply planes is isolated to reduce noise propagation.

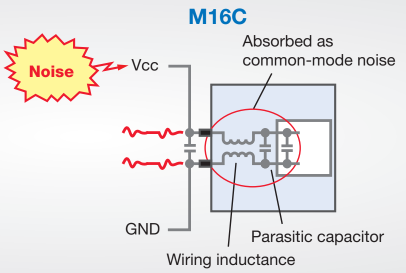

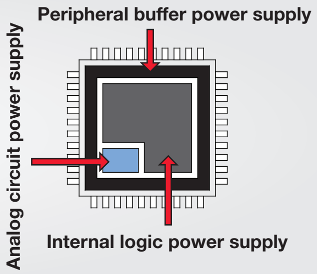

REASON #6: FLEXIBLE AND TRUSTED FLASH

#1 Supplier of Flash-based MCUs in the World

Renesas Technology has been an industry leader in flash-based MCUs for over a decade and has already shipped over 1 Billion of these devices. As a technology innovator, Renesas continues to invest in research and development of faster and denser memory technologies that can be incorporated in future generations of microcontrollers.

Flash Memory Roadmap

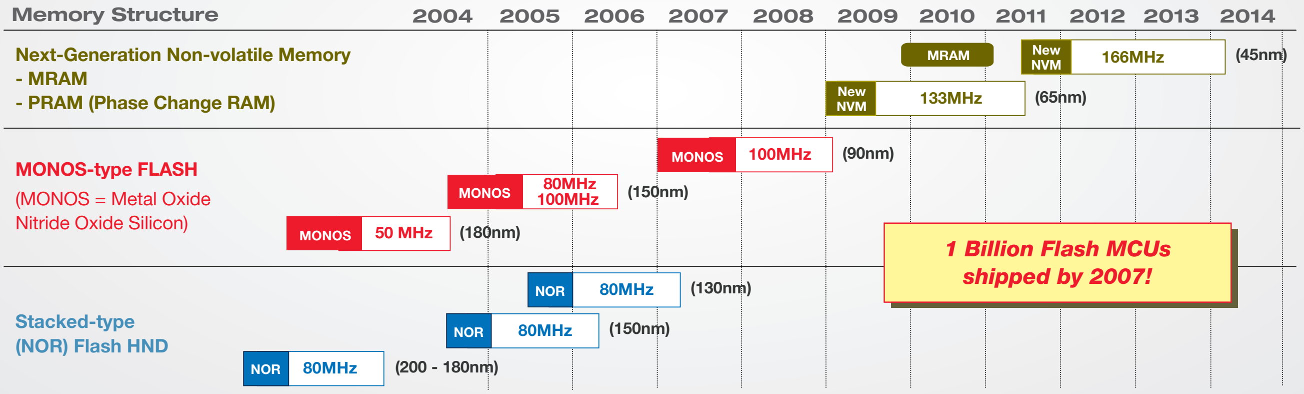

Flexible Flash Programming

- **Programmer Mode:** MCUs can be programmed using an external box such as a parallel programmer or debug emulator.
- **Boot Mode:** Built-in boot loader program allows PC connection through RS232 interface for easy programming.
- **CPU/User Mode:** Customer can develop custom bootloader program to rewrite the flash memory. The rewrite program can be transferred to RAM when all flash memory contents need to be changed.

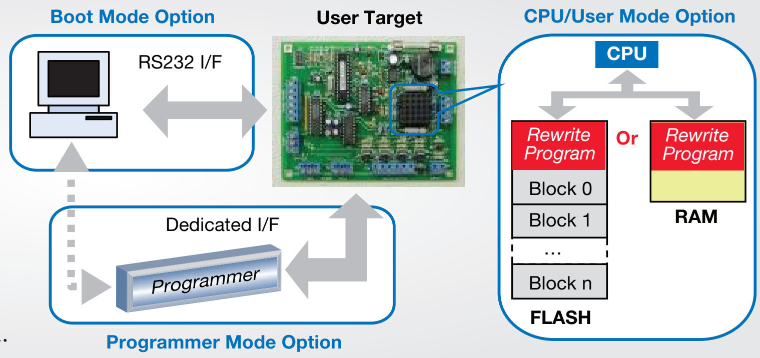

Secured Contents

- **ROM Code Protect** bits prevent reading or rewriting of the on-chip flash memory when using a parallel programmer.
- Similarly, during serial programming, the **Flash Memory ID Code** protection feature prevents unauthorized access. The multi-byte ID sent by the serial programmer must match the ID previously set by the user in order to access the flash memory.
- Individual flash blocks can also be set to an **Execute-Only Mode** to prevent undesired reading or rewriting.

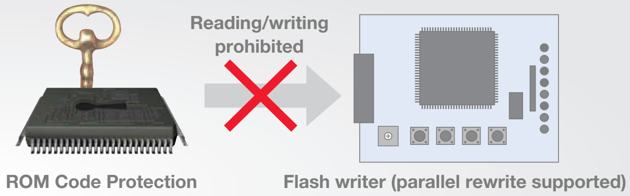

REASON #7: RELIABLE

Oscillation Stop Detection

Upon the detection of abnormal operation of the external oscillator, the M16C devices can automatically switch to the high-speed, highly accurate on-chip oscillator. Thus, system operation can be maintained and a graceful shut-down can be accomplished, if necessary.

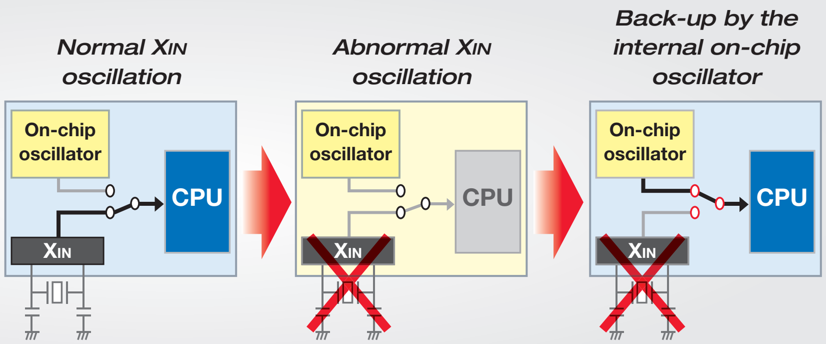

Enhanced Watchdog Timer (WDT)

WDTs in M16C devices provide enhanced functionality such as automatic run after reset is released. They can also be initiated by software. In addition, for added reliability, a dedicated low-speed on-chip oscillator (125kHz) can be selected as the clock source, ensuring operation independent from external clocks.

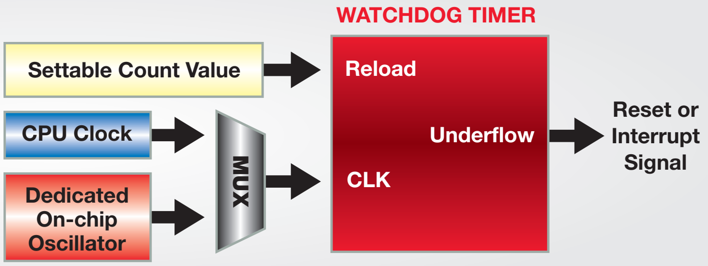

Power Supply Monitoring (R8C/3x only)

The Power Supply Monitoring circuitry in M16C devices can be used for Power-On Reset (POR) and Low-Voltage Detect (LVD) functions. Three different detection levels can be enabled to detect rising or falling voltage. If the system's power supply fluctuates beyond normal levels, the circuit can generate an interrupt signal to notify of a malfunction or can RESET the MCU to prevent an undesirable operating condition.

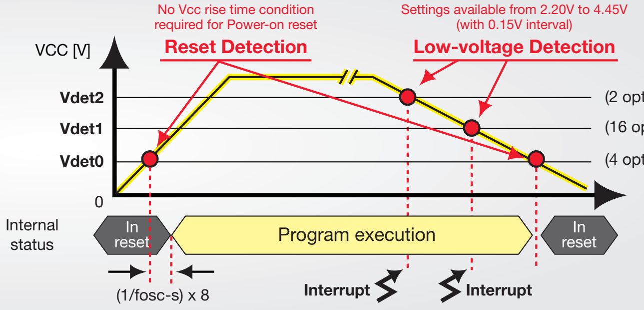

System Operation Access Control

The contents of Special Function Registers (SFRs) can be protected from undesirable access. System critical registers that configure operations such as system clock control, power supply monitoring and others can be set to read-only by using the Access Control Register (PRCR).

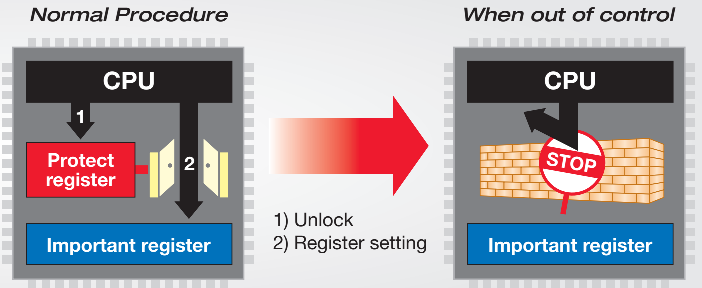

M16C Platform™ On-chip Peripherals

Highly Functional Timers

M16C MCUs have input and output timers that are used in combination with other peripheral functions.

3-Phase Inverter PWM Output (Applicable to Motor Control Systems)

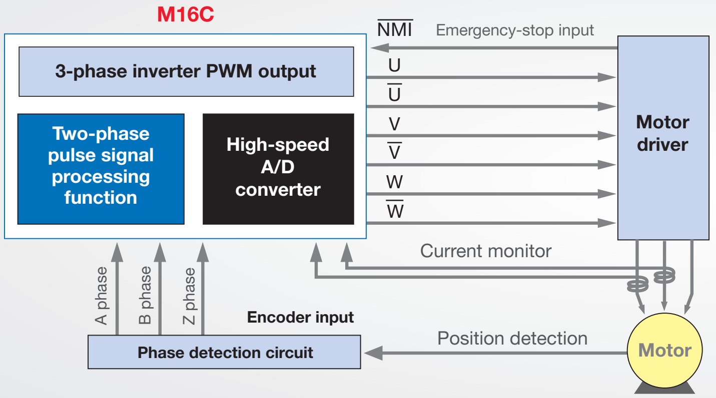

Independent Timer Operation

The timer's count operation is independent of the operation of the CPU. Even if the CPU is stopped, it is possible to operate the timer by means of external signals or a subclock (32kHz, etc.), thereby reducing current consumption.

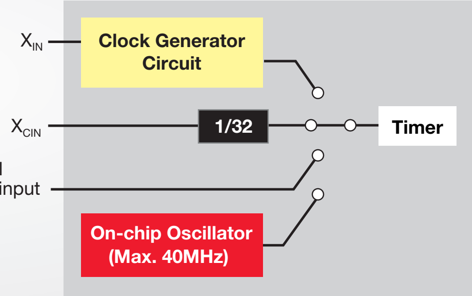

A/D Converter

High-Speed A/D Converter with Sample-and-Hold

(1) Conversion Speed (ØAD = 25MHz) (M16C/65) 10-Bit: 1.72 µs

(2) Successive Conversion ±3 LSB Accuracy

(3) High-Speed Sample-and-Hold
10MHz Operation: 0.3 µs, 20MHz Operation: 0.15 µs

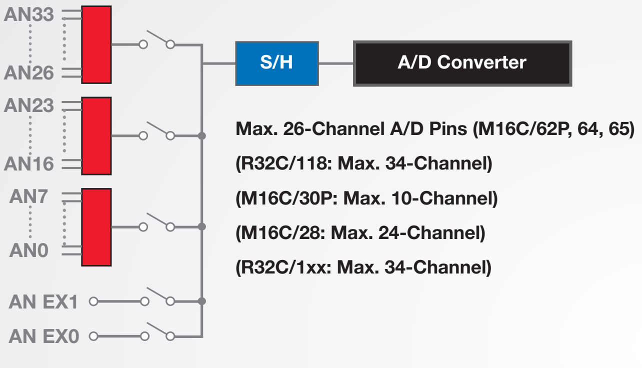

Improved A/D Converter Characteristics

The M16C/63, M16C/64, and M16C/65 deliver better A/D conversion accuracy than other M16C models.

Max. A/D conversion error		M16C/63, 64, 65	
At AVCC = VREF = 5V	Analog input (ANi, ANj_i)	±3 LSB	
	Extended analog input (ANEXi)	±3 LSB	Better accuracy
At AVCC = VREF = 3.3V	Analog input (ANi, ANj_i)	±3 LSB	Better accuracy
	Extended analog input (ANEXi)	±3 LSB	Better accuracy
At AVCC = VREF = 3V	Analog input (ANi, ANj_i)	±3 LSB	Better accuracy
	Extended analog input (ANEXi)	±3 LSB	Better accuracy

VREF Cutoff

The analog circuit reference voltage, VREF, can be turned on or off. Turning off VREF when the A/D converter is not being used can help reduce current consumption.

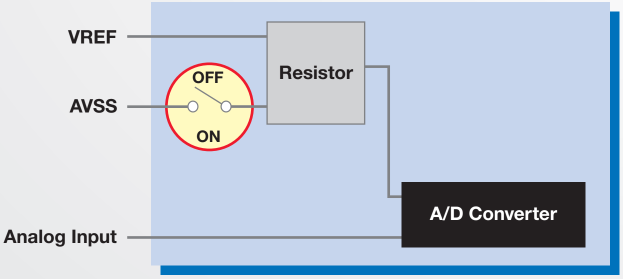

Measurement Error Avoidance (Unused A/D Overvoltage Processing)

This feature helps prevent measurement error due to wraparound between channels, even if the other A/D inputs include input that exceeds the VCC level. It also provides more accurate A/D conversion values.

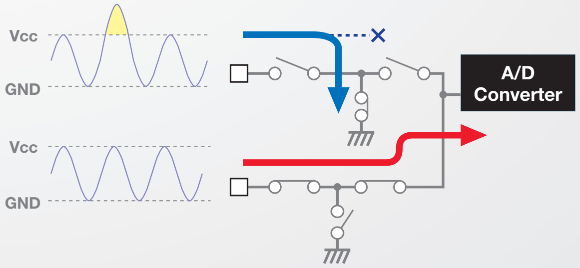

Data Flash and BackGround Operation (BGO)

Typical Flash Memory Operation:

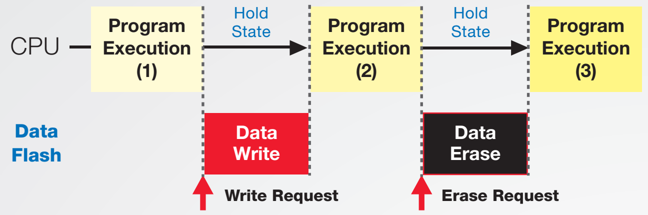

Flash Memory with BackGround Operation (BGO):

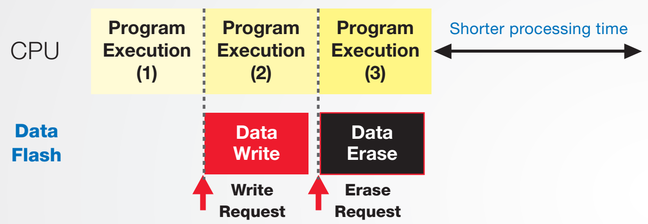

Data Flash

- Up to four blocks of 1KB each of Data Flash are available for R8C (two blocks of 4KB for other devices) for storage of non-volatile data
- Single-byte writing capable of wear-leveling format (example of Data Storage shown)

BGO

- BGO (BackGround Operation) allows Erasing or Programming of Data Flash while executing application code.

Suspend Mode

- Erase operation of Flash Memory (Program or Data block) can be suspended automatically to Read/Execute from different Flash Blocks
- Erase operation can also be suspended to Write different Flash Blocks (Program or Data)

Suspend Mode

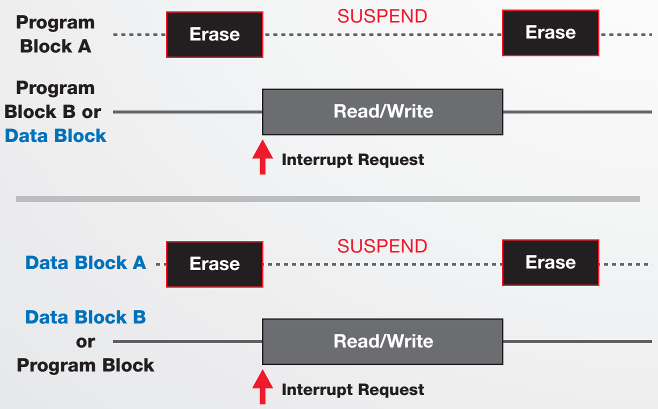

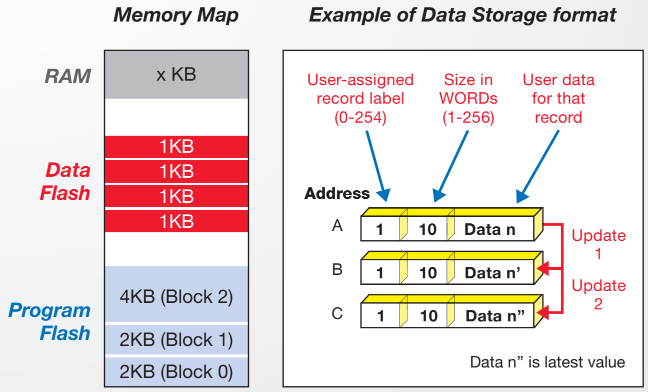

High-Precision High-Speed On-Chip Oscillator

- The 40MHz clock generated can be used to operate 16-bit timers directly

High Accuracy

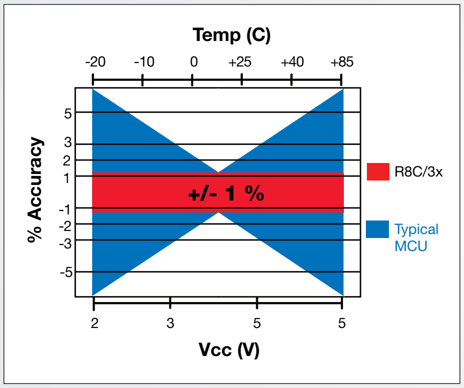

Power Supply Voltage Dependency

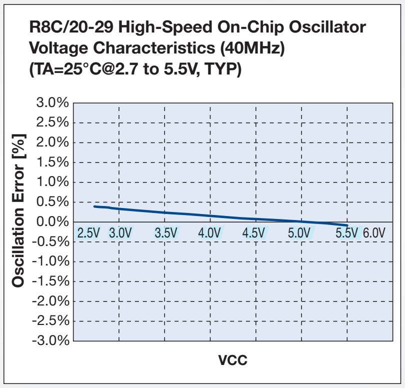

Temperature Dependency

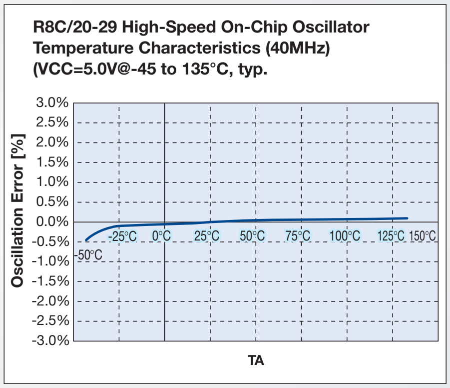

* OCO characteristics based on evaluation data

M16C Platform™ On-chip Peripherals

Serial Interface

UART/Clock-Synchronous Serial I/O

The R32C/100 has nine on-chip UART/clock-synchronous serial I/O channels

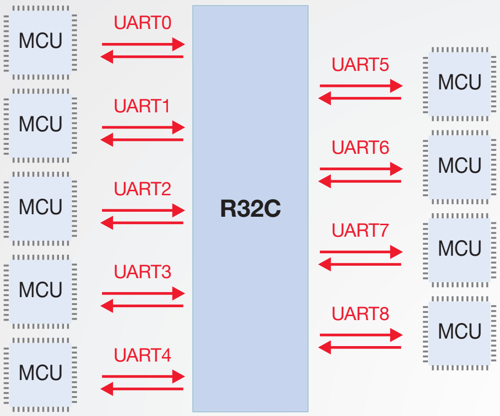

UART Function

In addition to normal UART capabilities, special functions are supported.

CTS/RTS Control

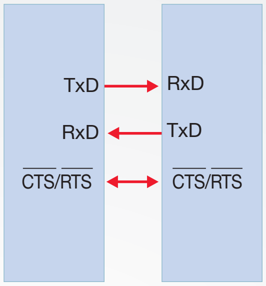

(Does not apply to M16C/Tiny.)

Capability to Connect 2 Peripheral ICs

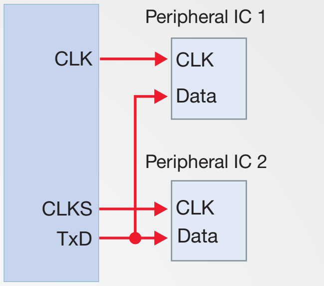

Gateway Function

Broad range of communication peripherals provides gateway functionality.

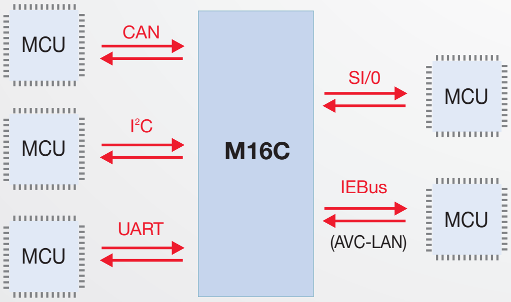

Gateway Function

Synchronous Serial Communication Unit (SPI compatible)

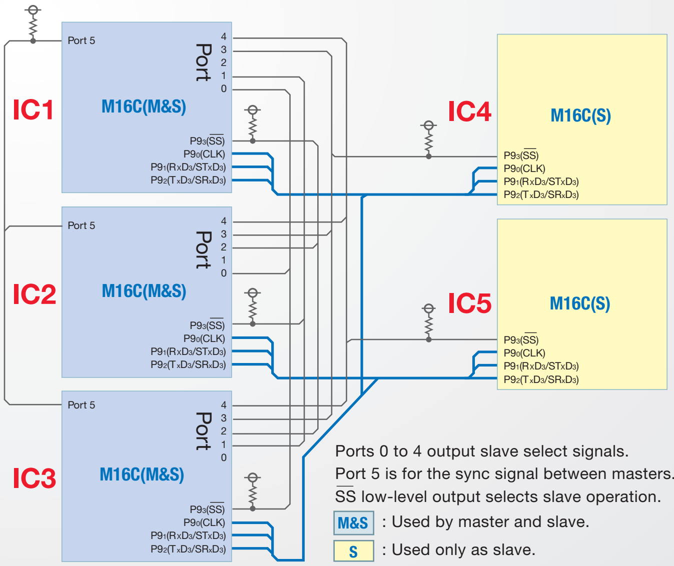

I²C Bus Interface

Supported MCUs	M16C/62P, M16C/64, M32C, R32C/111	M16C/63, M16C/65, M16C/Tiny, R8C, R32C/118
Communication control method	Partial software control	Hardware control
Start condition overlap detection	No detection	Detection supported
Arbitration lost detection	Requires flag to be initialized for each byte	Does not require flag to be initialized for each byte
Slave address match determination	Match determination by software	Match determination by hardware, interrupt generated only on match
Initial acknowledge generation	Generated by software after slave address determined	Automatic processing by hardware
Timeout detection function	None	Supported (dedicated timer)
Max. communication speed	384 kbps (because the SCL low-duration ≥ 1.3μs standard is not met at faster speeds)	400 kbps (max. value of I²C Bus standard high-speed mode)

Intelligent I/O

I/O ports can be configured to implement different peripheral functions.

Output Compare (Waveform Generator Function)

Interrupts are generated when matches occur between the base timer and waveform generator register values, generating a PWM waveform.

The following waveform output modes are implemented on all groups.
(1) Single-Phase Waveform Output (2) Inverted Waveform Output
(3) SR Waveform Output

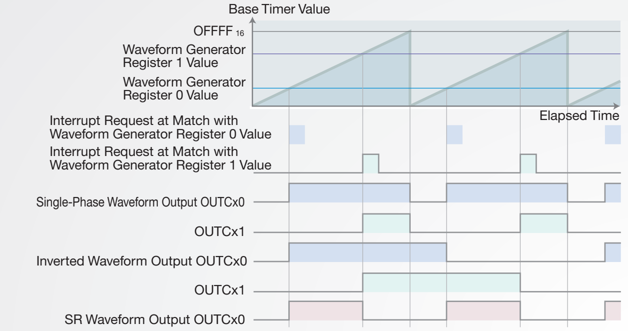

Input Capture (Time Measurement Function)

At trigger input, the timer value is stored in the time measurement register and an interrupt is generated.

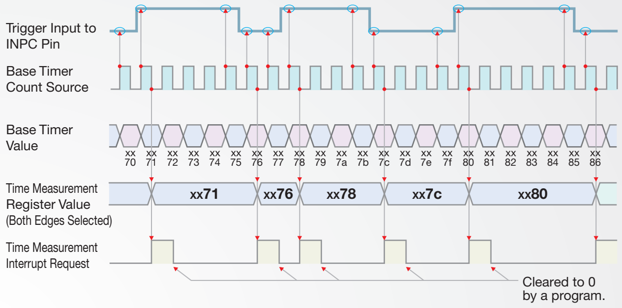

Bit Modulation PWM

High-frequency PWM output can be produced based on any bit between 6 and 16.

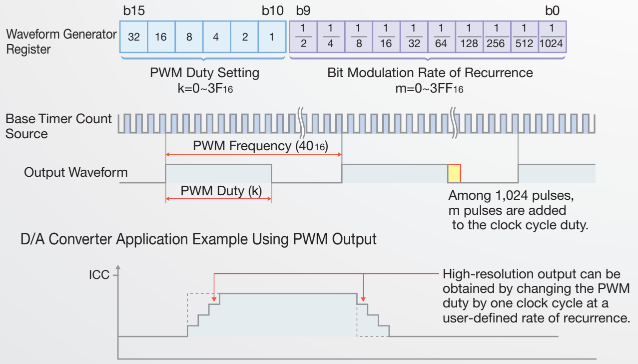

Input Capture (Digital Filter Function)

Digital Filter Function (INPC10 to INPC17)

The trigger input level is determined every f_1 or f_{BT1}, and pulses are allowed to pass through when three matches occur. (The clock of the digital filter can be selected to match the noise band.)

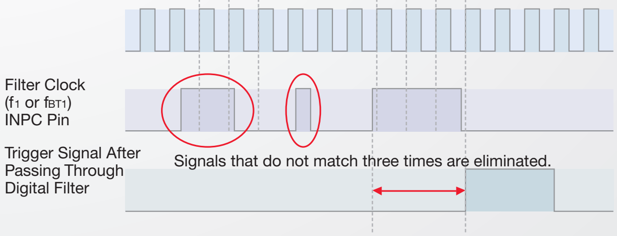

Signal Delay Caused by Digital Filter (Max. 3.5 Cycles of Filter Clock)

On-board LCD Controller Circuit

- Segment- or Dot Matrix-type support
- Up to 56 Segment lines and 8 Common lines for a maximum of 416 LCD segments/dots
- Internal multiplier function for LCD voltage supply
- Supports 3V or 5V LCD glass
- 1/2, 1/3 and 1/4 Bias options (internal or external configuration)
- Automatic Blink Function for each segment independently
- Multiple clock sources including 32kHz Sub-clock
- Dedicated LCD RAM area for display and control of each segment
- All SEG and COM pins are multiplexed with GPIO

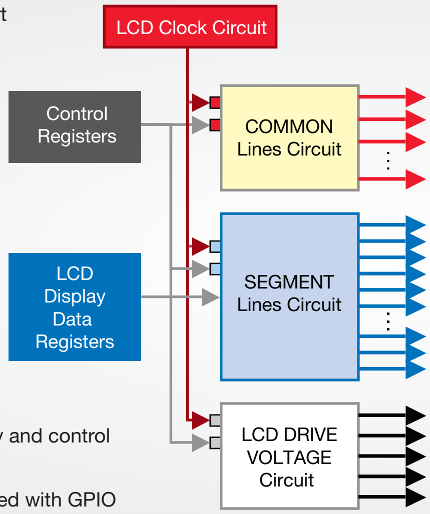

Example: Three 7-segment Digits (6 SEG; 4 COM)

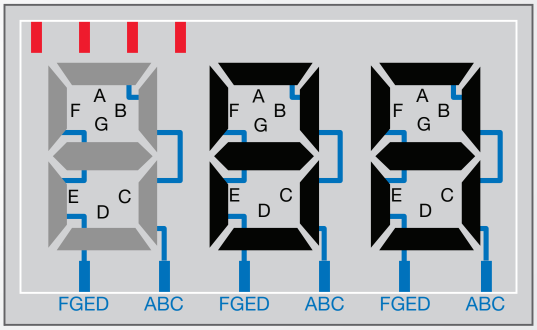

Development Tools: IDE Overview

EVALUATION	DEBUGGING	PROGRAMMING
Experiment with and verify the performance of devices, the HEW IDE, and HW/SW tools	Develop code with optimized compilers; find elusive bugs with emulators' powerful capture/record capabilities	Download software to reliable on-chip flash memory easily with the Flash Development Toolkit.

High-performance Embedded Workshop (HEW) INTEGRATED DEVELOPMENT & DEBUGGING SYSTEM

The Renesas High-performance Embedded Workshop integrates everything you need to build and debug your embedded applications in a single flexible easy-to-use environment.

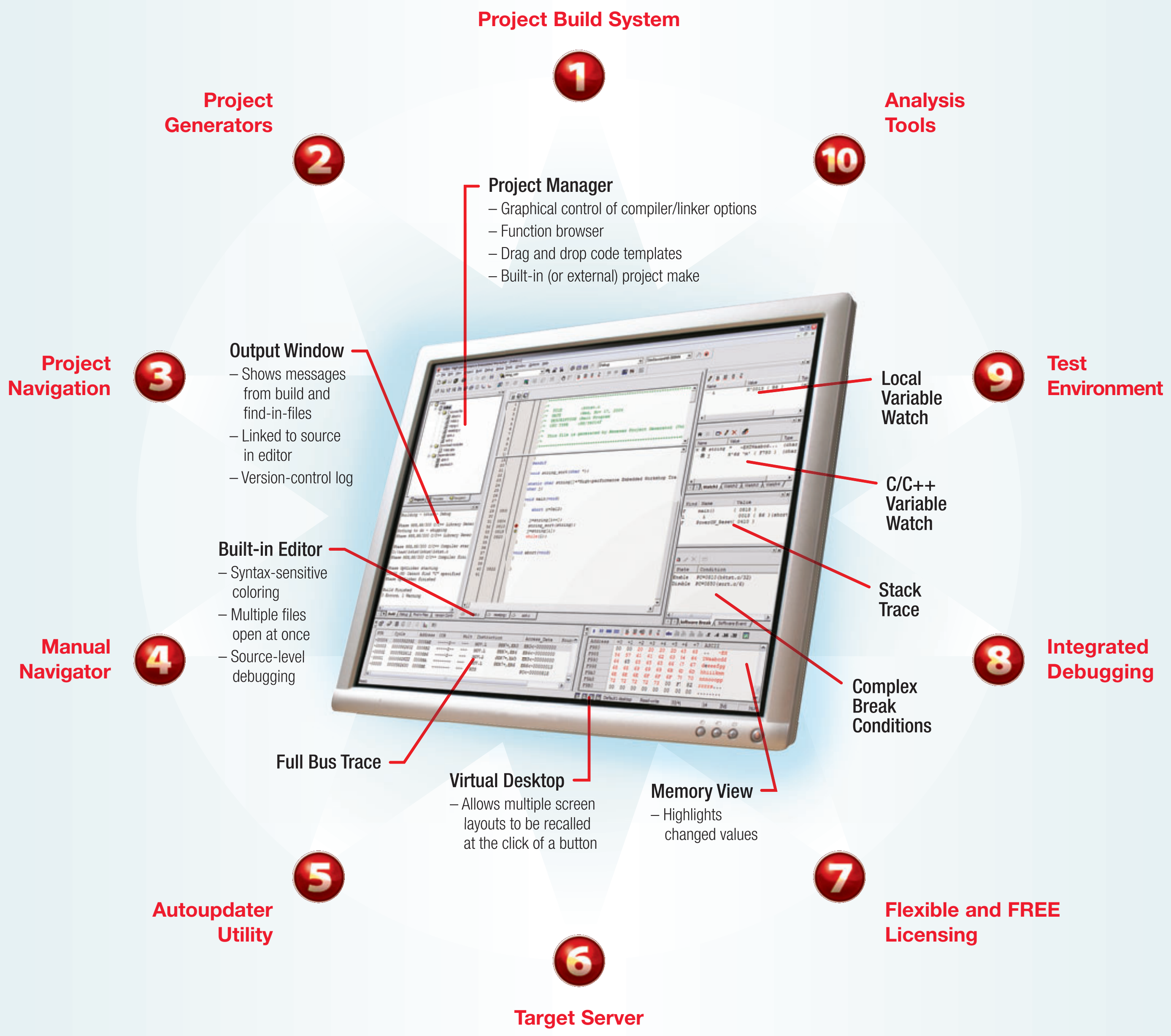

Features 1-10 are detailed on pages 17 and 18, followed by info on debugging and programming.

More information about HEW is available at http://www.america.renesas.com/HEW

Development Tools: IDE Features

1 Project Build System

HEW provides an easy-to-understand graphical interface for setting toolchain options and lets you store **multiple configurations** of options-to-file mappings. HEW's highly flexible build engine manages the toolchain executables and make system. **Custom phases** for pre- and post-processing may be inserted at any stage in the build.

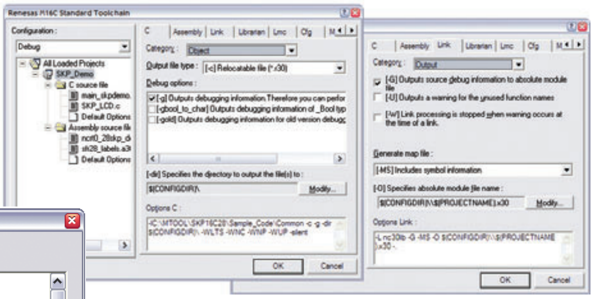

2 Project Generators

Wizards guide you through setting up your embedded application code. Starter Kits ship with sample code generators for all the peripherals.

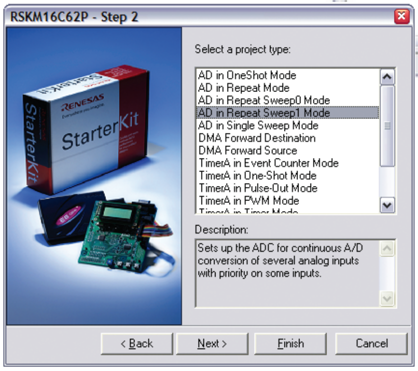

3 Project Navigation

HEW provides multiple views for efficiently navigating your project. The **Workspace** view shows the files that make up the project. You can even add project documentation or schematics to the project. The **Navigator** shows functions and variables. Double-clicking on any of the icons takes you to the object's definition.

4 Manual Navigator

The **Manual Navigator** is a central repository for all documentation relating to the Renesas tools installed on your system. A single location allows quick access for finding information.

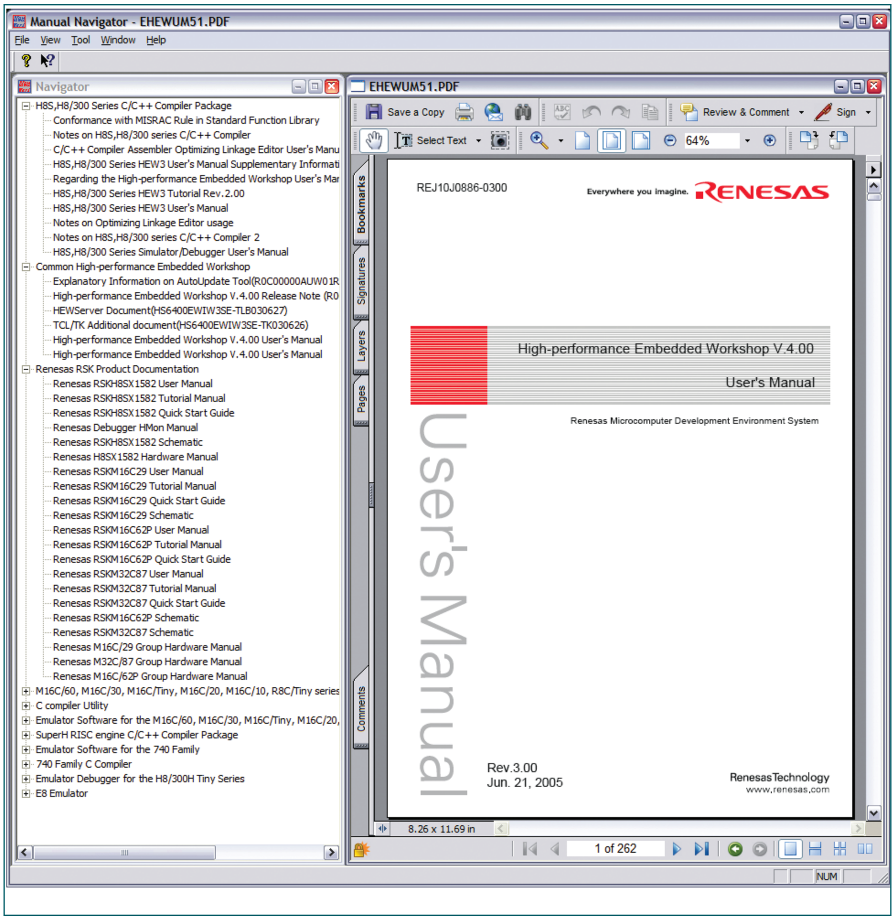

Autoupdater Utility

5

HEW ships with a utility that can automatically search Renesas web downloads for updates to components in your system and install them for you.

6 Target Server

HEW **Target Server** publishes a set of API functions which let you write your own Basic, C++ or C# Windows applications to control the HEW environment or your target system.

7 Flexible and FREE Licensing

Multiple licensing options including **free evaluation, workstation, floating network** and **USB keys** give you ultimate flexibility. You can download a **free** evaluation copy of HEW with the compiler and generate unlimited code for 60 days. This is very useful for benchmarking optimization efficiency and architecture performance. After 60 days, code size is limited to 64 KB, which still allows you to evaluate the architecture or experiment with peripherals. For smaller devices, you can even complete a full application since the evaluation version is identical to the full version.

Development Tools: Debugging Software

8 Integrated Debugging

HEW provides a common debug environment that lets you connect to multiple targets (**simulator, on-chip debugger** or **full in-circuit emulator**) from the same workspace and presents a consistent set of debugging views irrespective of the debug target you are using.

A simple **Session Wizard** lets you easily add a new debug target to an existing workspace. As well as standard source/assembly, watchpoints, locals, memory and stack trace views, HEW supports advanced debugging features such as **branch/bus trace** and **complex events.**

9 Test Environment

Automated testing options in HEW feature **TCL scripting** and recordable **macros,** which may be run to duplicate a set of actions. This is further enhanced by the Test Suite feature that allows you to record the output of the macro operation and later perform a differences analysis between the current and stored results.

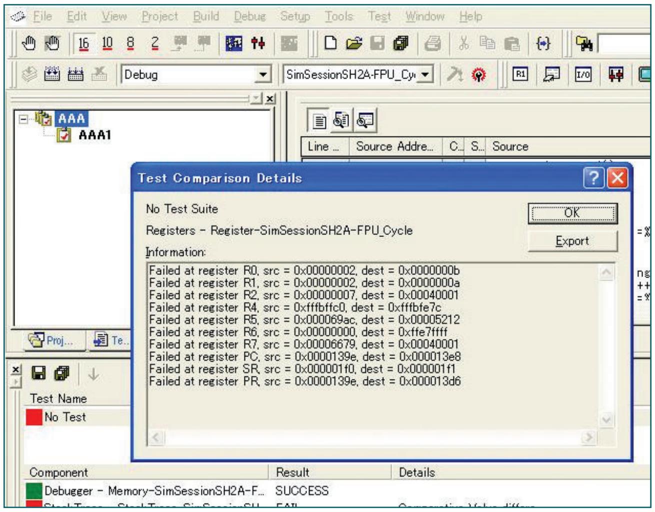

10 Analysis Tools

HEW's advanced analysis tools let you optimize your application code with features such as **Code Profiling, Performance Analysis, Stack Analysis** and graphical **Map View.**

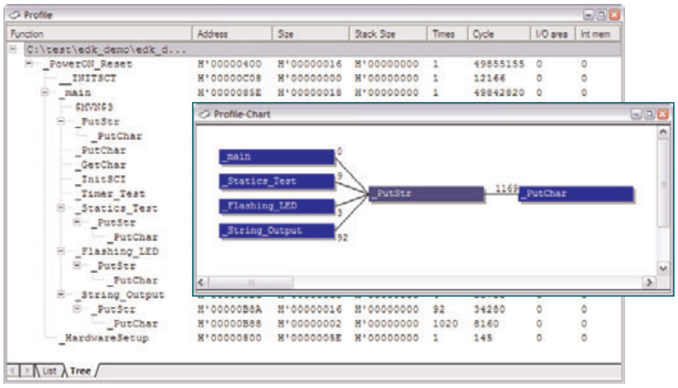

Code Profiling

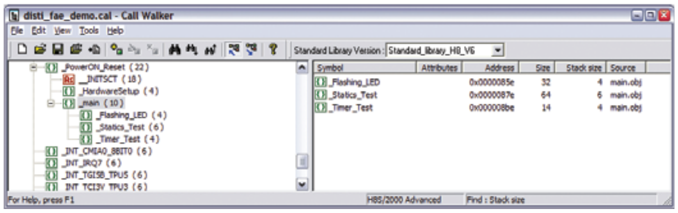

Stack Analyzer

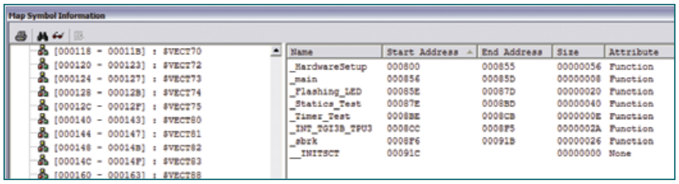

Map View

Programming with the Flash Development Toolkit (FDT)

Renesas' Flash Development Toolkit (FDT) is an easy-to-use utility for programming your code into the on-chip flash memory of M16C MCUs. You can create workspaces to combine several s-record files into one download image and save connection settings to easily manage device programming.

FDT offers:

- Support for programming via E8/E8a USB debugger
- Serial communication at up to 115,200 baud
- Simple mode for 1-button programming
- Hex image editor
- Extensive messaging that helps hardware development
- Direct USB connection for USB boot mode devices

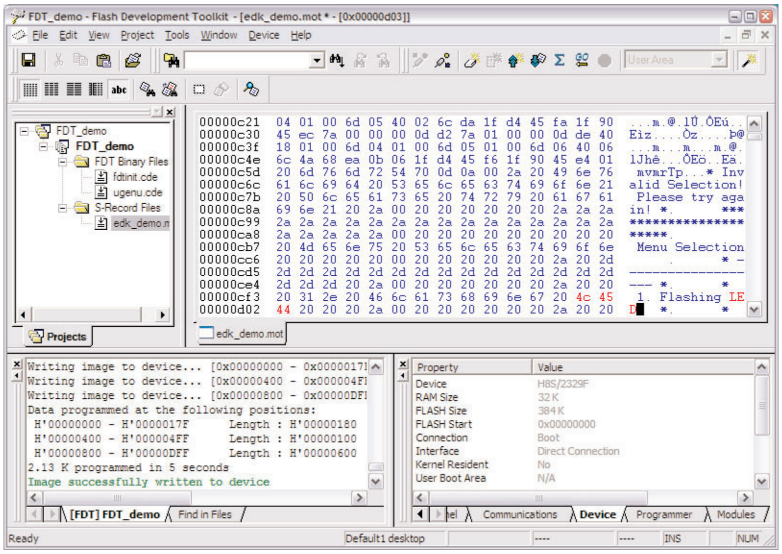

Development Tools: Debugging Hardware

Debugging Solutions Line-up

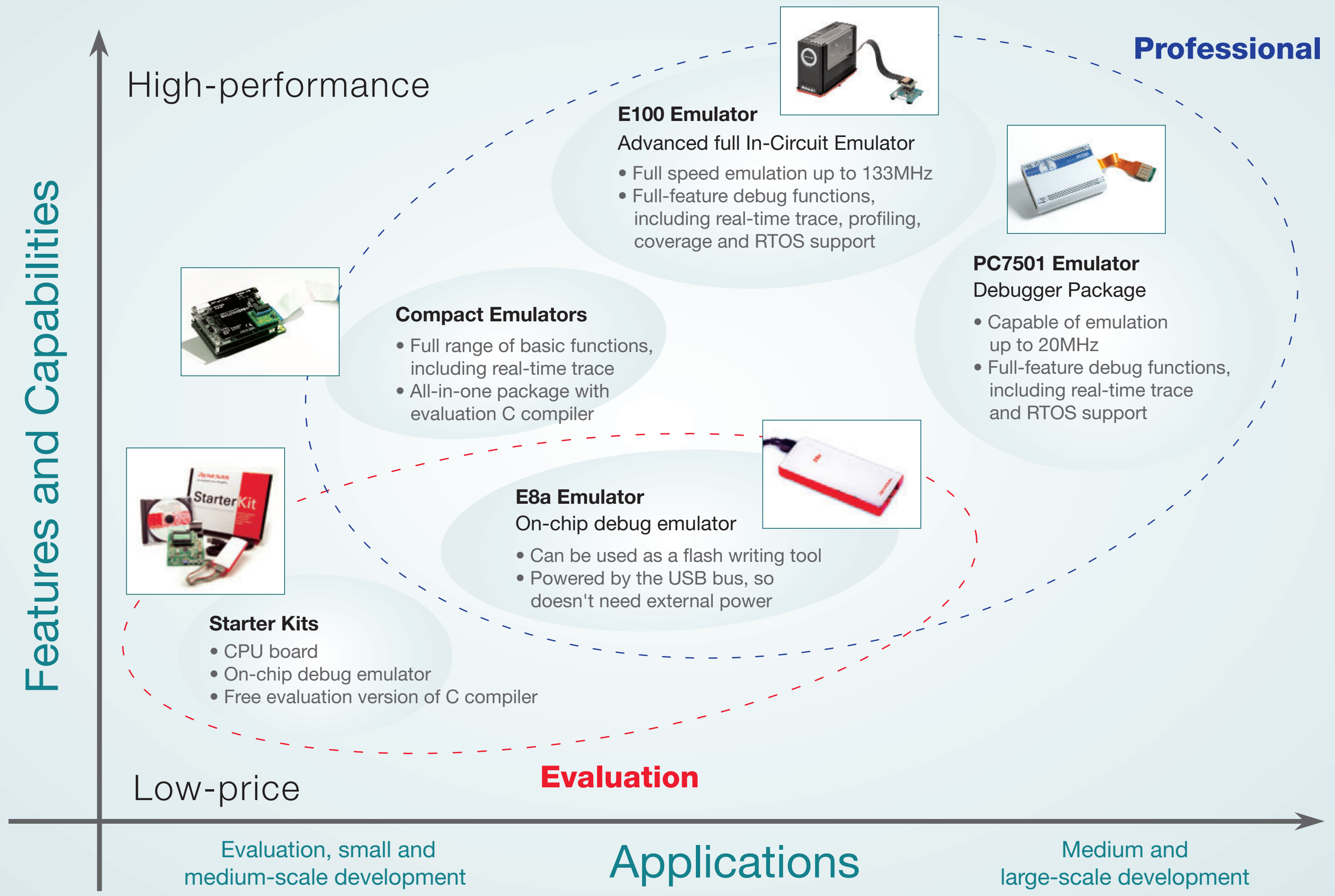

E8a on-chip emulators

The E8a emulators are designed to connect with Renesas' on-chip debugging interfaces. These low-cost tools provide real-time debugging on the target device using the dedicated debugging resources built into the target microcontroller in your user hardware. The on-chip emulators connect to the target system via an interface that can be used both to debug the system and to program the MCU's on-chip flash memory.

The E8a emulators use plug-and-play USB 2.0 compatible interfaces for easy connection to both notebook computers and desktop machines. These emulators offer:

- 255 PC breakpoints
- Hardware breakpoints on data and address
- Saved record of last 4-8 branches
- On-chip flash programming
- Integrated debugging support in HEW

Compact Emulators

For users who require full in-circuit emulation, but not the expanded resources of a traditional ICE, the compact emulator provides a superior cost-performance ratio in an extremely compact design. The emulator's main unit is significantly smaller than conventional emulator systems, allowing easier connection to target systems.

Although the compact emulator is very affordable, it has all the basic functions needed for real development, such as access to all of the devices' pins and memory map. It also provides real-time trace and hardware breaks.

- Includes HEW integrated development and debugging environment and an evaluation copy of C/C++ compiler tools
- Supplied as a package, including the target cable and PCB adaptor

PC7501 & E100 Full In-Circuit Emulators

These fully featured ICEs provide advanced debugging capabilities such as complex hardware break events and extensive bus trace to help you track down elusive bugs. They also include performance measurement and code analysis features to help you tune your applications for optimum performance and to verify your code test cases.

In-Circuit Emulator Feature Comparison

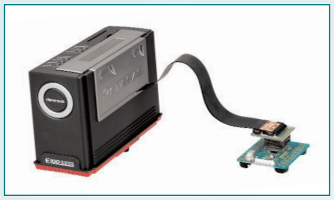

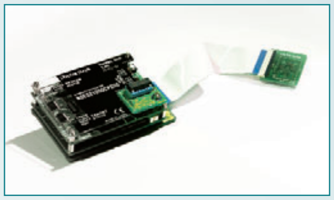

Features	E100 (M16C/64)	PC7501 (M16C/62P)	Compact Emulator
System configuration	E100Emulator + MCU unit	PC7501Emulator + Emulation probe	Compact Emulator + Target Cable
Maximum operating clock frequency	133MHz	66.7MHz	66.7MHz
Software break	4096 points	64 points	64 points
Hardware break	maximum 16 points	8 points	2 points
Exception event detection	• Access protect • Stack overflow detection • Initialization omission detection	• Access protect	
Multi-purpose events	• Hardware break • Trace • Performance • An event can be assigned freely to HW break, Trace point and Performance		
Real-time trace	• Trace range : 4M cycles • Trace data : Bus (Address, Data, Status), Time stamp, External trigger signal * • Trace modes : Free/Full/Point & Delay (65,535 times of delay count)/ Repeat (Free/Full) • Can be recorded ON/OFF by events *External trigger cable is sold separately.	• Trace range : 256K cycles • Trace data : Bus, External trigger, and Time stamp • Five trace modes : Break/Before/About/After/Full	• 64Kcycles (20-bit address, 16-bit data, 12-bit MCU status) • 5 modes (Break/Before/About/After/Full) • Can be turned ON/OFF by event
Real-time RAM monitor	• 16K bytes (512 bytes × 32 blocks) • Data / Last access result (Read/ Write/Non-access) • Initialization omission detection	• 4K bytes (256 bytes × 16 blocks) • Data / Last access result (Read/Write/Non-access)	• 1024 bytes (256 bytes x 4 blocks) • Data / Accessed or not
Execution time measurement	Execution time between program start to stop. Maximum/minimum/average execution time and pass count (32-bits counter) of specified eight zones.	Execution time between program start to stop. Maximum/minimum/average execution time and pass count (32-bits counter) of specified four zones.	Execution time between program start to stop. Count clock: 10MHz
Coverage	• C0 coverage : 2MB area, excludes pre-fetch (256K bytes × 32 blocks) • Data coverage :512KB area (64K bytes × 8 blocks)	• 8,192K bytes (256K bytes × 32 blocks)	
Real-time profile	Execution time and call frequency of up to 8K functions (128K bytes × 8 blocks) can be measured.	N/A	
Host computer Interface	• USB (USB2.0 high-speed)	• USB (USB 1.1, Full-speed) • LAN (10BASE-T) • LPT Parallel	USB (USB 1.1, Full-speed)
External Trigger Input / Event Output	32 signals * (Input level : CMOS or TTL, Output level : CMOS) The upper 16 bits are only for input, other 16 bits are switchable for input or output. *External trigger cable is sold separately.	External trigger input (MCU-dependent-voltage CMOS level × 8) or Event output (Break × 1, event × 7)	

Development Tools: Third-Party Support

E30A High-speed single-wire trace emulator for R32C

The E30A Emulator provides enhanced debugging and trace capabilities using the high-speed coaxial NSD (New Single-wire Debugger) debugging circuit in the R32C/100 series and connects to the PC using USB 2.0.

Execution address break	Max. 8 points (execution address/ data access) - Trace point/ time measurement event - Only address and R/W attribute specifiable for data access break - One data comparison breakpoint specifiable in software
Hardware break	
Combinatorial break point	OR/status transition (in forward direction)
Trace mode	Trace priority/ MCU execution priority specifiable
Trace capacity	8M events (Trace Priority)/ 512 events (MCU execution priority)
Trace contents	Branch source and Branch destination/ conditional branch/ data access
Trace event.	Max. 8 points/ 4 areas (prefetch address/ data access) - Trace point/ time measurement event- Start/ end/ extraction events
Time measurement	Execution time (between Go-Stop, 32-bit CPU clock counter) Interval time (3 points, between data access, 40-bit counter)
RAM monitor	Selectable byte or word access- pseudo-RAM monitor realized by software (one event used)

Part #:
R0E00030AKCT00

RENESAS R32C

Guide to Selected Third-party Development Tools

Many third-party experts offer hardware and software development tools supported by design services, RTOS, compilers, board-level solutions, custom firmware, and board-support packages (BSPs) to meet the needs of customers developing H8-based products.

IAR Systems offers a consistent IDE that supports nearly all MCU targets in the industry. The environment includes MISRA C support with integrated CSpy debugging, E8a and Full ICE support and Elf/Dwarf debug output (compatible with HEW for enhanced debugging with full ICE). In addition, IAR offers RTOS-aware debugging with plug-ins for Micriµm µC/OS-II, OSEK (ORTI) and Segger embOS. www.iar.com

Micriµm provides high-quality embedded software components by way of engineer-friendly source code, unsurpassed documentation and customer support. The company's world-renowned real-time operating system, the Micrium µC/OS-II, features the highest-quality source code available for today's embedded market. Micrium's products consistently shorten time-to-market throughout all product development cycles. www.micrium.com

Segger Microcontroller Systems provides a small and efficient real-time kernel embOS with graphical GUI and file system libraries. www.segger.com

KPIT Cummins Infosystems provides free-of-charge maintenance and support for GNU compiler tools, including installers that integrate the GCC toolchain into the HEW IDE and allow its use with Renesas debuggers and emulators. www.kpitgnutools.com

CMX Systems focuses on providing its customers with all of the tools needed to program their embedded applications. The company's core business is to develop and support real-time, multitasking operating systems (RTOS), TCP/IP stacks, Flash File Systems and USB stacks for a wide variety of 8-bit, 16-bit, and 32-bit microcontrollers, microprocessors, and digital signal processors. www.cmx.com

P&E Micro's Cyclone for Renesas is a powerful standalone in-circuit programmer for Renesas devices. It is able to communicate with a device using the control protocol of the target processor. The Cyclone is equipped with Ethernet, USB, and serial ports, which allow for quick and easy configuration. Once the Cyclone is configured, programming operations are completed in one touch. http://renesas.pemicro.com

For more details about third-party support, please visit: http://america.renesas.com/toolspartners

IO Wizard

Code builder for R8C & M16C/Tiny Micros

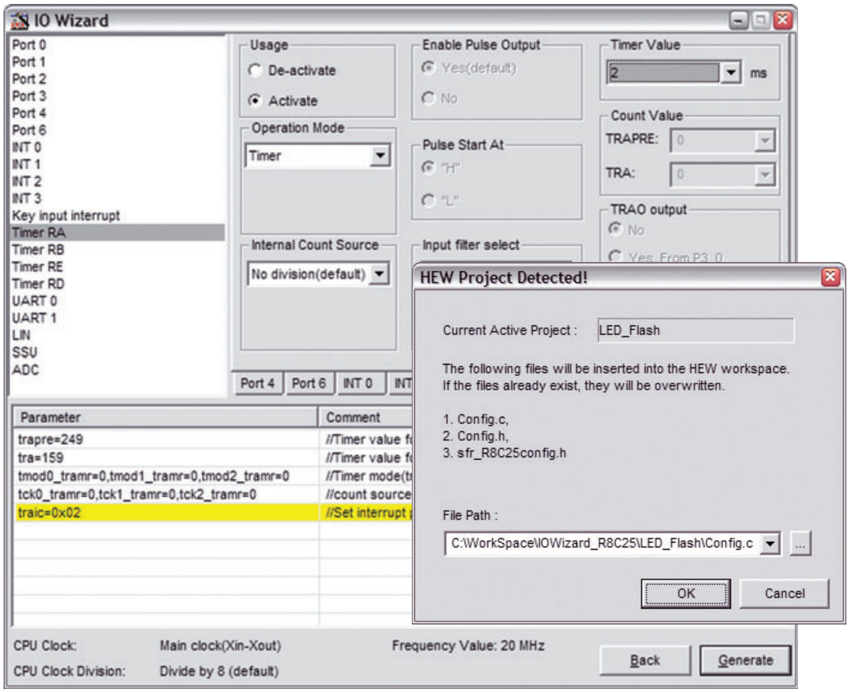

Get a quick start on peripheral evaluation with Renesas' free graphical initialization-code creator. Generates commented C source code directly into your HEW project.

Supported micros:

- **R8C/10**, 11, 12, 13
  R8C/1A, 1B
- **R8C/22**, 23, 24, 25, 26, 27, 28, 29
  R8C/2A, 2B, 2C, 2D
  R8C/2E, 2F, 2G, 2H, 2J, 2K, 2L
- **M16C/26A**
  M16C/28
  M16C/29

Download the application and tutorials:
america.renesas.com/IOWizard

Renesas Starter Kits [RSK...]

Renesas' low-cost Starter Kits (RSKs) are inexpensive ways to experience the performance of M16C microcontrollers. These kits bundle a low-cost target board with the on-chip debug emulator and the evaluation version of the HEW IDE to offer an integrated evaluation and development platform that lets you get up and running quickly with the M16C platform. Each kit comes complete with board and a CD-ROM that contains:

- **Evaluation version of HEW (High-performance Embedded Workshop) and C/C++ compilers**
- **Flash Development Toolkit** (FDT)

The CD included also has a quick-start guide that shows how to install the software and contains full documentation, plus a Project Generator HEW plug-in for tutorials and peripheral sample code.

The E8a emulator provides a foolproof connection to the host IDE and can also power the target board without the need for an external power supply.

For more information on starter kits, please visit
america.renesas.com/rsk

Revolutionary Microcontroller Evaluation Approach

Renesas' Subatomic Particle Demonstration Platform

Innovative
Hardware-interactive Multimedia Interface

Complete Environment
to Discover Microcontroller Solutions

Unlimited Development Resources
Just One Click Away

Subatomic Particle
DEMONSTRATION PLATFORM

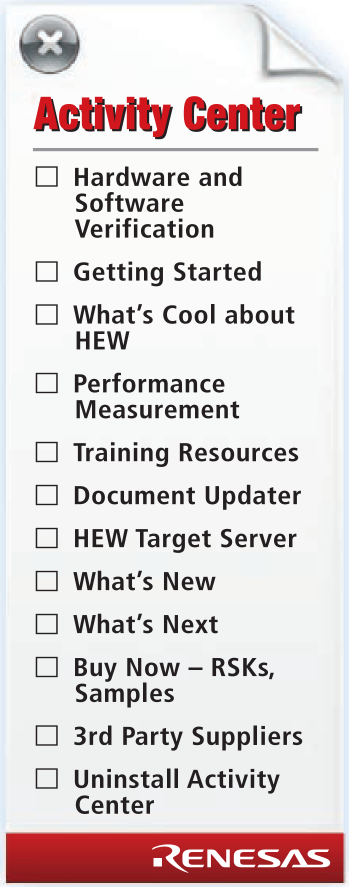

- **One platform** for demonstration of CPU architecture and peripherals for a complete microcontroller family
- Interactive **graphical user interface** for automatic verification of software and hardware operation
- **Activity Center** for progress tracking and access to key development resources
- **Free** full-featured software suites for 64KB maximum code size (**No code restriction for first 60 days**)
- **On-board sound playback** for voice-aided instructions and application use

Ordering Part Numbers:

R8C: YR8CSPB
M16C: YM16CSPB

www.america.renesas.com/SPB

CONTENTS:

- Interactive GUI with automated installer and activity center
- Free C Compiler and High-performance Embedded Workshop with sample projects
- Platform board with representative MCU
- USB I/F to Host PC
- Switch, LED's, light sensor
- Headphones for audio connection

Development Tools: Selectors & Ordering Information

Development Tool Selector for Focus Products

Series	Group	Ordering Part Number	Renesas Package Code	Starter Kit	On-chip Emulator	To find specific emulator part numbers, see opposite page		
						E100	PC7501	Compact Emulator
R8C	R8C/1B	R5F211B4SP#U0	PLSP0020JB-A	R0K5211B4S001BE	R0E00008AKCE00	-	✓	✓
	R8C/2J	R5F212J0SNSP#U0	PLSP0020JB-A	R0K521276S000BE	R0E00008AKCE00	-	✓	✓
	R8C/2H	R5F212H1SNSP#U0	PLSP0020JB-A	R0K521276S000BE	R0E00008AKCE00	-	✓	✓
	R8C/2H	R5F212H2SNSP#U0	PLSP0020JB-A	R0K521276S000BE	R0E00008AKCE00	-	✓	✓
	R8C/29	R5F21294SNSP#U0	PLSP0020JB-A	R0K521276S000BE	R0E00008AKCE00	-	✓	✓
	R8C/27	R5F21276SNFP#U0	PLQP0032GB-A	R0K521276S000BE	R0E00008AKCE00	-	✓	✓
	R8C/2G	R5F212G4SNFP#U0	PLQP0032GB-A	R0K521276S000BE	R0E00008AKCE00	-	✓	✓
	R8C/2G	R5F212G6SNFP#U0	PLQP0032GB-A	R0K521276S000BE	R0E00008AKCE00	-	✓	✓
	R8C/2F	R5F212F2NFP#U0	PLQP0032GB-A	R0K5212F4S000BE	R0E00008AKCE00	-	✓	✓
	R8C/2L	R5F212L4SNFP#U0	PLQP0032GB-A	R0K5212D8S000BE	R0E00008AKCE00	-	✓	✓
	R8C/23	R5F21238DFP#U0	PLQP0048KB-A	R0K521237S000BE	R0E00008AKCE00	-	✓	✓
	R8C/23	R5F2123CKFP#U0	PLQP0048KB-A	R0K521237S000BE	R0E00008AKCE00	-	✓	✓
	R8C/25	R5F21256SNFP#U0	PLQP0052JA-A	R0K521256S000BE	R0E00008AKCE00	-	✓	✓
	R8C/25	R5F21258SNFP#U0	PLQP0052JA-A	R0K521256S000BE	R0E00008AKCE00	-	✓	✓
	R8C/2B	R5F212B8SNFP#U0	PLQP0064KB-A	R0K5212D8S000BE	R0E00008AKCE00	-	✓	✓
	R8C/2B	R5F212BCSNFP#U0	PLQP0064KB-A	R0K5212D8S000BE	R0E00008AKCE00	-	✓	✓
	R8C/2D	R5F212D8SNFP#U0	PLQP0080KB-A	R0K5212D8S000BE	R0E00008AKCE00	-	✓	✓
	R8C/2D	R5F212DCSNFP#U0	PLQP0080KB-A	R0K5212D8S000BE	R0E00008AKCE00	-	✓	✓
	R8C/35A	R5F21356ANFP#U0	PLQP0052JA-A	R0K521356S000BE	R0E00008AKCE00	✓	-	-
	R8C/L3AC	R5F2L3ACANFP#U0	PLQP0100KB-A	R0K52L3ACS000BE	R0E00008AKCE00	✓	-	-
M16C/Tiny	M16C/26A	M30260F3AGP#U5A	PLQP0048KB-A	R0K33026AS001BE	R0E00008AKCE00	-	✓	✓
	M16C/26A	M30260F8AGP#U5A	PLQP0048KB-A	R0K33026AS001BE	R0E00008AKCE00	-	✓	✓
	M16C/28	M30281F6HP#U5B	PLQP0064KB-A	R0K330290S001BE	R0E00008AKCE00	-	✓	✓
	M16C/28	M30281FCHP#U5B	PLQP0064KB-A	R0K330290S001BE	R0E00008AKCE00	-	✓	✓
	M16C/28	M30280FCHP#U5B	PLQP0080KB-A	R0K330290S001BE	R0E00008AKCE00	-	✓	✓
	M16C/28	M30280FAWG#U5B	PTLG0085JB-A	SKP16CMINI28	R0E00008AKCE00	-	✓	✓
	M16C/29	M30291FCHP#U3A	PLQP0064KB-A	R0K330290S001BE	R0E00008AKCE00	-	✓	✓
	M16C/29	M30290FAHP#U3A	PLQP0080KB-A	R0K330290S001BE	R0E00008AKCE00	-	✓	✓
	M16C/29	M30290FCHP#U3A	PLQP0080KB-A	R0K330290S001BE	R0E00008AKCE00	-	✓	✓
M16C	M16C/30P	M30302FCPGP#U5	PLQP0100KB-A	R0K33062PS001BE	R0E00008AKCE00	-	✓	✓
	M16C/30P	M30302FEPGP#U5	PLQP0100KB-A	R0K33062PS001BE	R0E00008AKCE00	-	✓	✓
	M16C/62P	M30623F8PGP#U5C	PRQP0080JA-A	R0K33062PS001BE	R0E00008AKCE00	-	✓	✓
	M16C/62P	M30622F8PGP#U5C	PLQP0100KB-A	R0K33062PS001BE	R0E00008AKCE00	-	✓	✓
	M16C/62P	M30620FCPGP#U5C	PLQP0100KB-A	R0K33062PS001BE	R0E00008AKCE00	-	✓	✓
	M16C/62P	M3062LFGPGP#U5C	PLQP0100KB-A	R0K33062PS001BE	R0E00008AKCE00	-	✓	✓
	M16C/62P	M30626FHPGP#U5C	PLQP0100KB-A	R0K33062PS001BE	R0E00008AKCE00	-	✓	✓
	M16C/62P	M30626FJPGP#U5C	PLQP0100KB-A	R0K33062PS001BE	R0E00008AKCE00	-	✓	✓
	M16C/64	R5F3640MDFB#U0	PLQP0100KB-A	R0K53650MS000BE	R0E00008AKCE00	✓	-	-
	M16C/65	R5F3650TDFB#U0	PLQP0100KB-A	R0K53650MS000BE	R0E00008AKCE00	✓	-	-
	M16C/65	R5F3651TDFC#U0	PLQP0128KB-A	R0K53650MS000BE	R0E00008AKCE00	✓	-	-
	M16C/6C	R5F36C0MDFB	PLQP0100KB-A	Availability: 2Q2009	R0E00008AKCE00	✓	-	-
	M16C/6N4	M306N4FGGP#U3	PLQP0100KB-A	R0K3306NKS001BE	R0E00008AKCE00	-	✓	-
	M16C/6NK	M306NKFHGP#U3	PLQP0100KB-A	R0K3306NKS001BE	R0E00008AKCE00	-	✓	-
	M16C/6NM	M306NMFJGP#U3	PLQP0128KB-A	R0K3306NKS001BE	R0E00008AKCE00	-	✓	-
M32C	M32C/87	M30879FKGP#U3	PLQP0100KB-A	R0K330879S001BE	R0E00008AKCE00	-	✓	✓
	M32C/87	M30879FLGP#U3	PLQP0100KB-A	R0K330879S001BE	R0E00008AKCE00	-	✓	✓
	M32C/87B	M30876FJBGP#U3	PLQP0100KB-A	R0K330879S001BE	R0E00008AKCE00	-	✓	✓
	M32C/87B	M30875FHBGP#U3	PLQP0144KA-A	R0K330879S001BE	R0E00008AKCE00	-	✓	✓
	M32C/87B	M3087BFLBGP#U3	PLQP0144KA-A	R0K330879S001BE	R0E00008AKCE00	-	✓	✓
R32C	R32C/111	R5F64112DFB#U0	PLQP0100KB-A	R0K564112S000BE	R0E00008AKCE00	E30A	-	-
	R32C/118	R5F64189DFB#U0	PLQP0100KB-A	R0K564189S000BE	R0E00008AKCE00	E30A	-	-
	R32C/118	R5F64189DFD#U0	PLQP0144KA-A	R0K564189S000BE	R0E00008AKCE00	E30A	-	-

HEW Ordering Numbers

	Node Locked		Floating Network		USB Key
Family	1 user	5 user	1 user	5 user	1 user
M16C & R8C	RTA-HEWNC30-1U	RTA-HEWNC30-5U	RTA-HEWNC30-1UL	RTA-HEWNC30-5UL	RTA-HEWNC30-1K
M32C	RTA-HEWNC308-1U	RTA-HEWNC308-5U	RTA-HEWNC308-1UL	RTA-HEWNC308-5UL	RTA-HEWNC308-1K
R32C	YRTA-HEWNC100-1U	YRTA-HEWNC100-5U	YRTA-HEWNC100-1UL	YRTA-HEWNC100-5UL	YRTA-HEWNC100-1K

In-Circuit Emulator Selection

Choosing the components required to complete a full emulation system for a device can be a complicated task due to specific device support and package variations. The Renesas website provides helpful resources that simplify the selection of the required components.

Three Easy Steps:

1

Go to the Renesas web site and browse to an emulator product page.

2

Click on the Options link in the navigation menu to open the selection search.

3

Select the emulator type in the "Tool Name" menu and then the required MCU Family, Series, and Group. Click "Display Results" for a list of the required components.

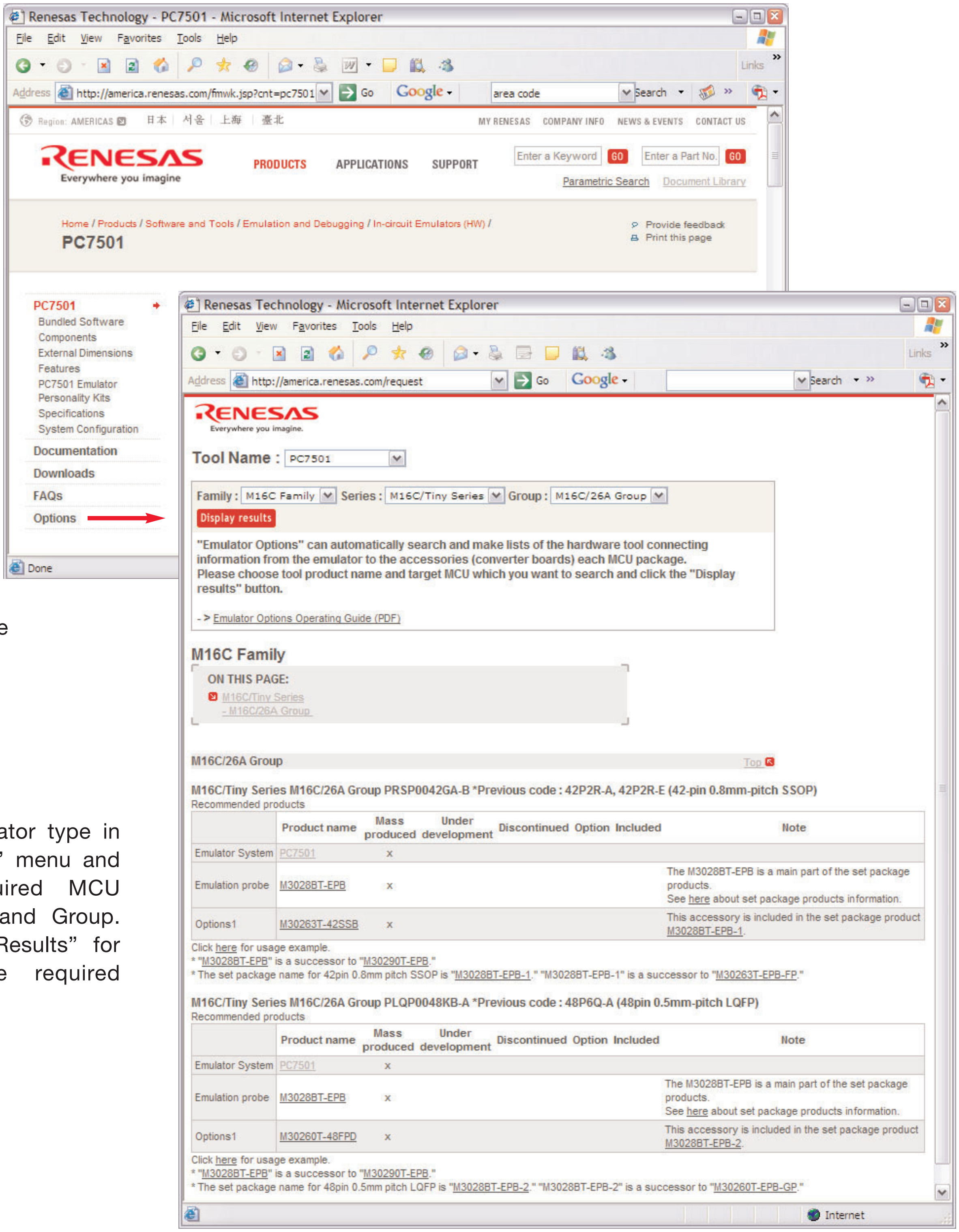

R8C/2x, 3x Series Line-up

Legend: (grey) : No data flash option; (yellow) : Automotive version available; (red) : Application focused devices

Pins	R8C/2x (2.2 – 5.5 V) (Broad Line-up, Application-Focused Devices)				R8C/3x (1.8 – 5.5 V) ** (High Performance, Advanced Features)	
64/80 PINS	**R8C/2A-2C** — 2ch D/A, 20ch A/D with Sweep Mode, 80-pin; 2ch D/A, 64-pin — 48-128KB Flash, 2.5-7.5KB RAM					
48/52 PINS	**R8C/20-21** — Automotive Grade (2.7-5.5V) — 32-128KB Flash, 2-6KB RAM	**R8C/22-23*** — CAN (2.7-5.5V) — 32-128KB Flash, 2-6KB RAM	**R8C/24-25** — 12ch A/D, 52-pin — 16-64KB Flash, 1-3KB RAM		**R8C/34E-H*** — CAN, BGO, DTC (2.7-5.5V) — 32-128KB Flash, 2.5-10KB RAM	**R8C/35A** — 12ch A/D, BGO, DTC, 52-pin — 16-128KB Flash, 1.5-10KB RAM
24/32 PINS	**R8C/2G** — 8MHz; Comparators — 16-32KB Flash, 0.5-1KB RAM	**R8C/26-27** — 20MHz; 12ch A/D — 8-32KB Flash, 0.5-1.5KB RAM	**R8C/2K-2L** — Motor — 8-16KB Flash, 1.0-1.5KB RAM	**R8C/2E-2F** — Lighting, (2.7 – 5.5V) — 8-16KB Flash, 0.5-1KB RAM	**R8C/3GA** — 8ch A/D, BGO, DTC, 24-pin — 4-32KB Flash, 0.5-2.5KB RAM	**R8C/33A** — 12ch A/D, BGO, DTC — 4-32KB Flash, 0.5-2.5KB RAM
20 PINS	**R8C/2J** — 8MHz; Comparators, 16-pin — 2-4KB Flash, 0.25-0.375KB RAM	**R8C/2H** — 8MHz; RTC, Comparators — 4-8KB Flash, 0.25-0.375KB RAM	**R8C/28-29** — 20MHz; 4ch A/D — 8-32KB Flash, 0.5-1.5KB RAM		**R8C/32A** — 4ch A/D, BGO, DTC — 4-16KB Flash, 0.5-1.5KB RAM	

* R8C/22-23 and R8C/34E-F products are listed under the CAN MCU section on pages 38-39.

** Contact Renesas for details and availability

R8C/3x Features

- 16-bit CPU with 16-bit multiplier and Data Transfer Control yielding over 50% increased performance compared to R8C/2x
- 40 MHz ±1% over temperature and voltage (Factory calibrated and guaranteed)
- Four 1KB Data Flash blocks with BackGround Operation for simultaneous execution of application code and Flash re-write
- Window Watchdog Timer with dedicated 125kHz oscillator, Power-On Reset circuit with no Vcc rise time requirement. Low-voltage detect circuit with 16 software-selectable options
- 2.15μs ADC with up to eight conversion registers for Sweep mode

R8C/3x Application Example

R8C/35A Controlling a Brushless DC Motor

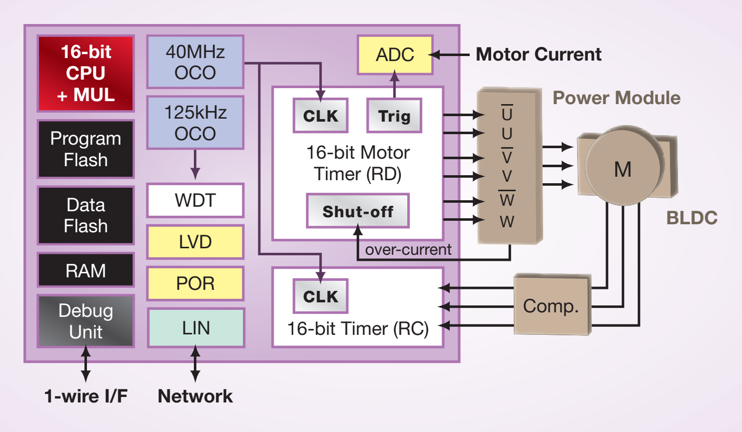

R8C/35A Block Diagram

R8C Core	Program Flash (16KB - 128KB)	Data Transfer Controller
40MHz On-chip Oscillator	Data Flash & BGO (4 x 1KB)	On-chip Debug
Main Clock (20MHz)	RAM (1.5KB - 10KB)	Enhanced Watchdog Timer
Ext. Oscillation Stop Detection	Enhanced POR & LVD	Timer RA: 8-bit
125kHz On-chip Oscillator x2	Analog Comparator (4 ch)	Timer RB: 8-bit
Sub Clock (32kHz)	ADC: 10-bit (12 ch)	Timer RC: 16-bit
Clock Sync./ UART (3 ch)	DAC: 8-bit (2 ch)	Timer RD: 16-bit (2 ch)
Hardware LIN	I²C / SSU	Timer RE: 8-bit (Real-time Clock)

GP I/O: 48

*R8C/3x Starter Kit**

R8C/35A Development Kit
(includes free compiler)

Part Number:
R0K521356S000BE

* available Q1 2009

R8C/2x Series Selector Guide

Group	Catalog Part Number (See Note 1)	Flash (Kbytes)	Data Flash (Kbytes)	RAM (Kbytes)	Vcc min	Vcc max	max MHz @ Vcc max	On-chip Oscillator	Oscillation Stop Detect	32 kHz Sub Clock	Power On Reset / Low Voltage Detect	Power Down Modes	On-chip Debug	Timers: 8-bit timers	Timers: 16-bit timers	Analog: A/D 10-bit resolution	Analog: D/A 8-bit resolution	Communication (see note 2): Serial (sync/async)	Communication: SSU (SPI Compatible)	Communication: I²C	Communication: Hardware LIN	External Interrupts	GPIO (High Current)	Temp/Grade Code (Note 3)	Special Features	Package: SP (PLSP0020JB-A, LSSOP)	Package: FP (PLQP0032GB-A, LQFP)	Package: FP (PLQP0048KB-A, LQFP)	Package: FP (PLQP0052JA-A, LQFP)	Package: FP (PLQP0064GA-A, LQFP)	Package: FP (PLQP0064KB-A, LQFP)	Package: LG (PTLG0064JA-A, FLGA)	Package: FP (PTQP0080KC-A, TQFP)
R8C/2J	R5F212J0S	2	-	0.25	2.2	5.5	8	Y	-	-	Y	3	Y	2	1	-	-	1	-	-	1	3	12(0)	N, D	WDTO, 2-ch Comparator	Y	-	-	-	-	-	-	-
	R5F212J1S	4	-	0.375	2.2	5.5	8	Y	-	-	Y	3	Y	2	1	-	-	1	-	-	1	3	12(0)	N, D		Y	-	-	-	-	-	-	-
R8C/2H	R5F212H1S	4	-	0.25	2.2	5.5	8	Y	-	Y	Y	3	Y	3	1	-	-	2	-	-	1	3	16(0)	N, D	WDTO, 2-ch Comparator	Y	-	-	-	-	-	-	-
	R5F212H2S	8	-	0.375	2.2	5.5	8	Y	-	Y	Y	3	Y	3	1	-	-	2	-	-	1	3	16(0)	N, D		Y	-	-	-	-	-	-	-
R8C/2G	R5F212G4S	16	-	0.5	2.2	5.5	8	Y	-	Y	Y	3	Y	3	1	-	-	2	-	-	1	5	28(0)	N, D	WDTO, 2-ch Comparator	-	Y	-	-	-	-	-	-
	R5F212G5S	24	-	1.0	2.2	5.5	8	Y	-	Y	Y	3	Y	3	1	-	-	2	-	-	1	5	28(0)	N, D		-	Y	-	-	-	-	-	-
	R5F212G6S	32	-	1.0	2.2	5.5	8	Y	-	Y	Y	3	Y	3	1	-	-	2	-	-	1	5	28(0)	N, D		-	Y	-	-	-	-	-	-
R8C/2E	R5F212E2	8	-	0.5	2.7	5.5	20	Y	Y	-	Y	3	Y	3	1	12	2	1	-	-	1	4	28(8)	N, D	WDTO, 2-ch Comparator with D/A connection	-	Y	-	-	-	-	-	-
	R5F212E4	16	-	1.0	2.7	5.5	20	Y	Y	-	Y	3	Y	3	1	12	2	1	-	-	1	4	28(8)	N, D		-	Y	-	-	-	-	-	-
R8C/2F	R5F212F2	8	2	0.5	2.7	5.5	20	Y	Y	-	Y	3	Y	3	1	12	2	1	-	-	1	4	28(8)	N, D	WDTO, 2-ch Comparator with D/A connection	-	Y	-	-	-	-	-	-
	R5F212F4	16	2	1.0	2.7	5.5	20	Y	Y	-	Y	3	Y	3	1	12	2	1	-	-	1	4	28(8)	N, D		-	Y	-	-	-	-	-	-
R8C/2K	R5F212K2S	8	-	1.0	2.2	5.5	20	Y	Y	-	Y	3	Y	2	3	9	-	2	-	-	1	4	28(8)	N, D	WDTO	-	Y	-	-	-	-	-	-
	R5F212K4S	16	-	1.5	2.2	5.5	20	Y	Y	-	Y	3	Y	2	3	9	-	2	-	-	1	4	28(8)	N, D		-	Y	-	-	-	-	-	-
R8C/2L	R5F212L2S	8	2	1.0	2.2	5.5	20	Y	Y	-	Y	3	Y	2	3	9	-	2	-	-	1	4	28(8)	N, D	WDTO	-	Y	-	-	-	-	-	-
	R5F212L4S	16	2	1.5	2.2	5.5	20	Y	Y	-	Y	3	Y	2	3	9	-	2	-	-	1	4	28(8)	N, D		-	Y	-	-	-	-	-	-
R8C/20	R5F21206	32	-	2.0	2.7	5.5	20	Y	Y	-	Y	4	Y	3	2	12	-	2	1	1	1	5	44(0)	J, K	WDTO	-	-	Y	-	-	-	-	-
	R5F21207	48	-	2.5	2.7	5.5	20	Y	Y	-	Y	4	Y	3	2	12	-	2	1	1	1	5	44(0)	J, K		-	-	Y	-	-	-	-	-
	R5F21208	64	-	3.0	2.7	5.5	20	Y	Y	-	Y	4	Y	3	2	12	-	2	1	1	1	5	44(0)	J, K		-	-	Y	-	-	-	-	-
	R5F2120A	96	-	5.0	2.7	5.5	20	Y	Y	-	Y	4	Y	3	2	12	-	2	1	1	1	5	44(0)	J, K		-	-	Y	-	-	-	-	-
	R5F2120C	128	-	6.0	2.7	5.5	20	Y	Y	-	Y	4	Y	3	2	12	-	2	1	1	1	5	44(0)	J, K		-	-	Y	-	-	-	-	-
R8C/21	R5F21216	32	2	2.0	2.7	5.5	20	Y	Y	-	Y	4	Y	3	2	12	-	2	1	1	1	5	44(0)	J, K	WDTO	-	-	Y	-	-	-	-	-
	R5F21217	48	2	2.5	2.7	5.5	20	Y	Y	-	Y	4	Y	3	2	12	-	2	1	1	1	5	44(0)	J, K		-	-	Y	-	-	-	-	-
	R5F21218	64	2	3.0	2.7	5.5	20	Y	Y	-	Y	4	Y	3	2	12	-	2	1	1	1	5	44(0)	J, K		-	-	Y	-	-	-	-	-
	R5F2121A	96	2	5.0	2.7	5.5	20	Y	Y	-	Y	4	Y	3	2	12	-	2	1	1	1	5	44(0)	J, K		-	-	Y	-	-	-	-	-
	R5F2121C	128	2	6.0	2.7	5.5	20	Y	Y	-	Y	4	Y	3	2	12	-	2	1	1	1	5	44(0)	J, K		-	-	Y	-	-	-	-	-
R8C/24	R5F21244S	16	-	1.0	2.2	5.5	20	Y	Y	Y	Y	4	Y	3	2	12	-	2	1	1	1	5	44(8)	N, D	WDTO	-	-	-	Y	-	-	Y	-
	R5F21245S	24	-	2.0	2.2	5.5	20	Y	Y	Y	Y	4	Y	3	2	12	-	2	1	1	1	5	44(8)	N, D		-	-	-	Y	-	-	-	-
	R5F21246S	32	-	2.0	2.2	5.5	20	Y	Y	Y	Y	4	Y	3	2	12	-	2	1	1	1	5	44(8)	N, D		-	-	-	Y	-	-	Y	-
	R5F21247S	48	-	2.5	2.2	5.5	20	Y	Y	Y	Y	4	Y	3	2	12	-	2	1	1	1	5	44(8)	N, D		-	-	-	Y	-	-	-	-
	R5F21248S	64	-	3.0	2.2	5.5	20	Y	Y	Y	Y	4	Y	3	2	12	-	2	1	1	1	5	44(8)	N, D		-	-	-	Y	-	-	-	-
R8C/25	R5F21254S	16	2	1.0	2.2	5.5	20	Y	Y	Y	Y	4	Y	3	2	12	-	2	1	1	1	5	44(8)	N, D	WDTO	-	-	-	Y	-	-	Y	-
	R5F21255S	24	2	2.0	2.2	5.5	20	Y	Y	Y	Y	4	Y	3	2	12	-	2	1	1	1	5	44(8)	N, D		-	-	-	Y	-	-	-	-
	R5F21256S	32	2	2.0	2.2	5.5	20	Y	Y	Y	Y	4	Y	3	2	12	-	2	1	1	1	5	44(8)	N, D		-	-	-	Y	-	-	Y	-
	R5F21257S	48	2	2.5	2.2	5.5	20	Y	Y	Y	Y	4	Y	3	2	12	-	2	1	1	1	5	44(8)	N, D		-	-	-	Y	-	-	-	-
	R5F21258S	64	2	3.0	2.2	5.5	20	Y	Y	Y	Y	4	Y	3	2	12	-	2	1	1	1	5	44(8)	N, D		-	-	-	Y	-	-	-	-
R8C/26	R5F21262S	8	-	0.5	2.2	5.5	20	Y	Y	Y	Y	4	Y	3	1	12	-	2	1	1	1	4	28(8)	N, D	WDTO	-	Y	-	-	-	-	-	-
	R5F21264S	16	-	1.0	2.2	5.5	20	Y	Y	Y	Y	4	Y	3	1	12	-	2	1	1	1	4	28(8)	N, D		-	Y	-	-	-	-	-	-
	R5F21264	16	-	1.0	2.7	5.5	20	Y	Y	-	Y	4	Y	3	1	12	-	2	1	1	1	4	28(0)	J, K		-	Y	-	-	-	-	-	-
	R5F21265S	24	-	1.5	2.2	5.5	20	Y	Y	Y	Y	4	Y	3	1	12	-	2	1	1	1	4	28(8)	N, D		-	Y	-	-	-	-	-	-
	R5F21266S	32	-	1.5	2.2	5.5	20	Y	Y	Y	Y	4	Y	3	1	12	-	2	1	1	1	4	28(8)	N, D		-	Y	-	-	-	-	-	-
	R5F21266	32	-	1.5	2.7	5.5	20	Y	Y	-	Y	4	Y	3	1	12	-	2	1	1	1	4	28(0)	J, K		-	Y	-	-	-	-	-	-
R8C/27	R5F21272S	8	2	0.5	2.2	5.5	20	Y	Y	Y	Y	4	Y	3	1	12	-	2	1	1	1	4	28(8)	N, D	WDTO	-	Y	-	-	-	-	-	-
	R5F21274S	16	2	1.0	2.2	5.5	20	Y	Y	Y	Y	4	Y	3	1	12	-	2	1	1	1	4	28(8)	N, D		-	Y	-	-	-	-	-	-
	R5F21274	16	2	1.0	2.7	5.5	20	Y	Y	-	Y	4	Y	3	1	12	-	2	1	1	1	4	28(0)	J, K		-	Y	-	-	-	-	-	-
	R5F21275S	24	2	1.5	2.2	5.5	20	Y	Y	Y	Y	4	Y	3	1	12	-	2	1	1	1	4	28(8)	N, D		-	Y	-	-	-	-	-	-
	R5F21276S	32	2	1.5	2.2	5.5	20	Y	Y	Y	Y	4	Y	3	1	12	-	2	1	1	1	4	28(8)	N, D		-	Y	-	-	-	-	-	-
	R5F21276	32	2	1.5	2.7	5.5	20	Y	Y	-	Y	4	Y	3	1	12	-	2	1	1	1	4	28(0)	J, K		-	Y	-	-	-	-	-	-
R8C/28	R5F21282S	8	-	0.5	2.2	5.5	20	Y	Y	Y	Y	4	Y	3	1	4	-	2	1	1	1	4	16(8)	N, D	WDTO	Y	-	-	-	-	-	-	-
	R5F21284S	16	-	1.0	2.2	5.5	20	Y	Y	Y	Y	4	Y	3	1	4	-	2	1	1	1	4	16(8)	N, D		Y	-	-	-	-	-	-	-
	R5F21284	16	-	1.0	2.7	5.5	20	Y	Y	-	Y	4	Y	3	1	4	-	2	1	1	1	4	16(0)	J, K		Y	-	-	-	-	-	-	-
	R5F21286	32	-	1.5	2.7	5.5	20	Y	Y	-	Y	4	Y	3	1	4	-	2	1	1	1	4	16(0)	J, K		Y	-	-	-	-	-	-	-
R8C/29	R5F21292S	8	2	0.5	2.2	5.5	20	Y	Y	Y	Y	4	Y	3	1	4	-	2	1	1	1	4	16(8)	N, D	WDTO	Y	-	-	-	-	-	-	-
	R5F21294S	16	2	1.0	2.2	5.5	20	Y	Y	Y	Y	4	Y	3	1	4	-	2	1	1	1	4	16(8)	N, D		Y	-	-	-	-	-	-	-
	R5F21294	16	2	1.0	2.7	5.5	20	Y	Y	-	Y	4	Y	3	1	4	-	2	1	1	1	4	16(0)	J, K		Y	-	-	-	-	-	-	-
	R5F21296	32	2	1.5	2.7	5.5	20	Y	Y	-	Y	4	Y	3	1	4	-	2	1	1	1	4	16(0)	J, K		Y	-	-	-	-	-	-	-
R8C/2A	R5F212A7S	48	-	2.5	2.2	5.5	20	Y	Y	Y	Y	4	Y	3	4	12	2	3	1	1	1	5	57(8)	N, D	WDTO	-	-	-	-	Y	Y	Y	-
	R5F212A8S	64	-	3.0	2.2	5.5	20	Y	Y	Y	Y	4	Y	3	4	12	2	3	1	1	1	5	57(8)	N, D		-	-	-	-	Y	Y	Y	-
	R5F212AAS	96	-	7.0	2.2	5.5	20	Y	Y	Y	Y	4	Y	3	4	12	2	3	1	1	1	5	57(8)	N, D		-	-	-	-	Y	Y	Y	-
	R5F212ACS	128	-	7.5	2.2	5.5	20	Y	Y	Y	Y	4	Y	3	4	12	2	3	1	1	1	5	57(8)	N, D		-	-	-	-	Y	Y	Y	-
R8C/2B	R5F212B7S	48	2	2.5	2.2	5.5	20	Y	Y	Y	Y	4	Y	3	4	12	2	3	1	1	1	5	57(8)	N, D	WDTO	-	-	-	-	Y	Y	Y	-
	R5F212B8S	64	2	3.0	2.2	5.5	20	Y	Y	Y	Y	4	Y	3	4	12	2	3	1	1	1	5	57(8)	N, D		-	-	-	-	Y	Y	Y	-
	R5F212BAS	96	2	7.0	2.2	5.5	20	Y	Y	Y	Y	4	Y	3	4	12	2	3	1	1	1	5	57(8)	N, D		-	-	-	-	Y	Y	Y	-
	R5F212BCS	128	2	7.5	2.2	5.5	20	Y	Y	Y	Y	4	Y	3	4	12	2	3	1	1	1	5	57(8)	N, D		-	-	-	-	Y	Y	Y	-
R8C/2C	R5F212C7S	48	-	2.5	2.2	5.5	20	Y	Y	Y	Y	4	Y	3	4	20	2	3	1	1	1	5	73(8)	N, D	WDTO, A/D with Sweep function	-	-	-	-	-	-	-	Y
	R5F212C8S	64	-	3.0	2.2	5.5	20	Y	Y	Y	Y	4	Y	3	4	20	2	3	1	1	1	5	73(8)	N, D		-	-	-	-	-	-	-	Y
	R5F212CAS	96	-	7.0	2.2	5.5	20	Y	Y	Y	Y	4	Y	3	4	20	2	3	1	1	1	5	73(8)	N, D		-	-	-	-	-	-	-	Y
	R5F212CCS	128	-	7.5	2.2	5.5	20	Y	Y	Y	Y	4	Y	3	4	20	2	3	1	1	1	5	73(8)	N, D		-	-	-	-	-	-	-	Y
R8C/2D	R5F212D7S	48	2	2.5	2.2	5.5	20	Y	Y	Y	Y	4	Y	3	4	20	2	3	1	1	1	5	73(8)	N, D	WDTO, A/D with Sweep function	-	-	-	-	-	-	-	Y
	R5F212D8S	64	2	3.0	2.2	5.5	20	Y	Y	Y	Y	4	Y	3	4	20	2	3	1	1	1	5	73(8)	N, D		-	-	-	-	-	-	-	Y
	R5F212DAS	96	2	7.0	2.2	5.5	20	Y	Y	Y	Y	4	Y	3	4	20	2	3	1	1	1	5	73(8)	N, D		-	-	-	-	-	-	-	Y
	R5F212DCS	128	2	7.5	2.2	5.5	20	Y	Y	Y	Y	4	Y	3	4	20	2	3	1	1	1	5	73(8)	N, D		-	-	-	-	-	-	-	Y

Notes:

1. Full part number format: [Base Part Number] [Temperature/Grade Code] [Package Suffix] [Production Type]
   Example: [R5F21256S] [D] [FP] [#U0] = R5F21256SDFP#U0 --> R8C/25; 32KB; Industrial Temp; 52-pin LQFP; Tray Production
2. Some channels are shared. Check data sheet for details.
3. Refer to Appendix A-1 (Nomenclature of Part Number) for details.

Optimized Pin Compatibility

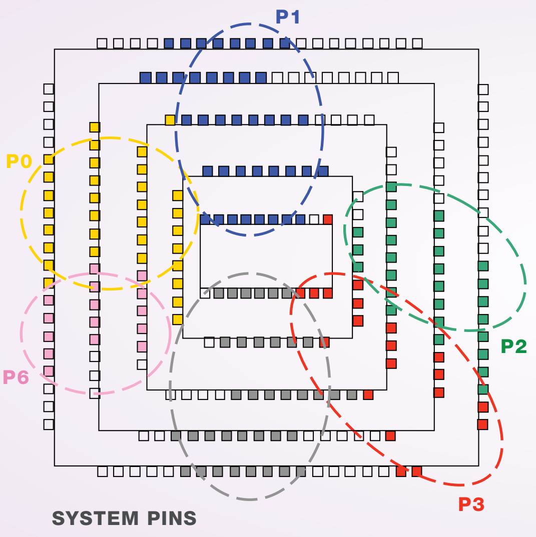

- Optimized pin assignment compatibility between 20- to 80-pin devices in R8C/3x series
- No connection-crossing makes scaling (up or down) quick and simple
- Numerous SSOPs, QFPs, and QFN packages with different dimensions allows easy layout of multiple package footprints on one circuit board
- Package details (arranged by body size):

24-pin QFN: 4mm x 4mm, 0.5mm pitch

20-pin LSSOP: 4.4mm x 6.5mm, 0.65mm pitch

32-pin LQFP: 7mm x 7mm, 0.8mm pitch

48-pin LQFP: 7mm x 7mm, 0.5mm pitch

52-pin LQFP: 10mm x 10mm, 0.65mm pitch

80-pin LQFP: 12mm x 12mm, 0.5mm pitch

64-pin LQFP: 14mm x 14mm, 0.8mm pitch

Example:
20-pin LSSOP inside 32-pin LFQP

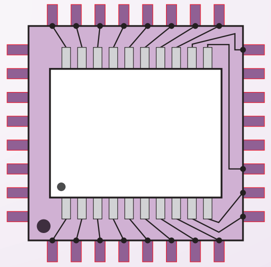

1-Wire On-chip Debugging & Programming

On-chip Debug Unit		R8C/2x	R8C/3x
		Hardware & Monitor	Enhanced Hardware
Communication specification	Serial Interface	Asynchronous	Asynchronous
	Base clock	Internal on-chip oscillator	Internal on-chip oscillator
Break	Before execution	Address match: up to 2 points	Address match: 8 points
Trace	Trace information	Branch destination: 4 points	Branch/data access: 8 points
	Trace condition	Not available	Combination of 2 points
Memory Modification during execution		By monitor program	By Debug DMA

- **Unified Interface**
  - Debugging and Programming
- **Physical Connection**
  - 1 wire (dedicated MODE pin)
- **Break Points (Type)**
  - Address and Data

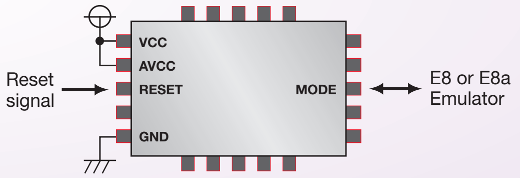

Data Transfer Controller

R8C/3x devices incorporate a DMA-like engine which allows data transfers between memory and peripherals without CPU intervention, increasing overall performance significantly. Data can be transferred automatically within the first 64KB of memory. The DTC is activated by software control or by a peripheral interrupt providing fast response. A transfer is defined in a 'Control File' (i.e., channel) which is located in RAM. A maximum of 24 channels can be set up in the MCU. Each transfer can be made up of up to 256 bytes and can occur up to 256 times in normal or repeat mode.

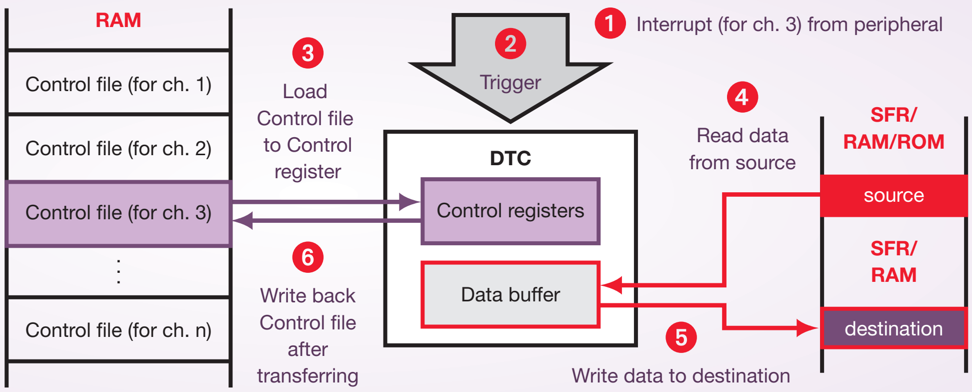

R8C/3x Series Selector Guide

Group [4]	Catalog Part Number (See Note 1)	Flash (Kbytes)	Data Flash (Kbytes)	RAM (Kbytes)	Vcc min	Vcc max	max MHz @ Vcc max	On-chip Oscillator	Oscillation Stop Detect	32 kHz Sub Clock	Power On Reset / Low Voltage Detect	Power Down Modes	On-chip Debug	DTC	Timers		Analog			Communication (see note 2)				External Interrupts	GPIO (High Current)	Temp/Grade Code (Note 3)	Special Features	Package				
															8-bit timers	16-bit timers	A/D 10-bit resolution	D/A 8-bit resolution	Comparators	Serial (sync/async)	SSU (SPI Compatible)	I²C	Hardware LIN					SP (PLSP0020JB-A, LSSOP)	NP (PWQN0024KC-A, QFN)	FP (PLQP0032GB-A, LQFP)	FP (PLQP0048KB-A, LQFP)	FP (PLQP0052JA-A, LQFP)
R8C/32A	R5F21321A	4	4	0.5	1.8	5.5	20	Y	Y	Y	Y	4	Y	Y	3	1	4	-	4	2	1	2	1	7	16(15)	N, D		Y	-	-	-	-
	R5F21322A	8	4	1.0	1.8	5.5	20	Y	Y	Y	Y	4	Y	Y	3	1	4	-	4	2	1	2	1	7	16(15)	N, D	WDTO, BGO	Y	-	-	-	-
	R5F21324A	16	4	1.5	1.8	5.5	20	Y	Y	Y	Y	4	Y	Y	3	1	4	-	4	2	1	2	1	7	16(15)	N, D		Y	-	-	-	-
R8C/3GA	R5F213G1A	4	4	0.5	1.8	5.5	20	Y	Y	Y	Y	4	Y	Y	3	1	8	2	4	2	1	2	1	7	20(19)	N, D		-	Y	-	-	-
	R5F213G2A	8	4	1.0	1.8	5.5	20	Y	Y	Y	Y	4	Y	Y	3	1	8	2	4	2	1	2	1	7	20(19)	N, D		-	Y	-	-	-
	R5F213G4A	16	4	1.5	1.8	5.5	20	Y	Y	Y	Y	4	Y	Y	3	1	8	2	4	2	1	2	1	7	20(19)	N, D	WDTO, BGO	-	Y	-	-	-
	R5F213G5A	24	4	2.0	1.8	5.5	20	Y	Y	Y	Y	4	Y	Y	3	1	8	2	4	2	1	2	1	7	20(19)	N, D		-	Y	-	-	-
	R5F213G6A	32	4	2.5	1.8	5.5	20	Y	Y	Y	Y	4	Y	Y	3	1	8	2	4	2	1	2	1	7	20(19)	N, D		-	Y	-	-	-
R8C/33A	R5F21331A	4	4	0.5	1.8	5.5	20	Y	Y	Y	Y	4	Y	Y	3	1	12	2	4	3	1	2	1	7	28(27)	N, D		-	-	Y	-	-
	R5F21332A	8	4	1.0	1.8	5.5	20	Y	Y	Y	Y	4	Y	Y	3	1	12	2	4	3	1	2	1	7	28(27)	N, D		-	-	Y	-	-
	R5F21334A	16	4	1.5	1.8	5.5	20	Y	Y	Y	Y	4	Y	Y	3	1	12	2	4	3	1	2	1	7	28(27)	N, D	WDTO, BGO	-	-	Y	-	-
	R5F21335A	24	4	2.0	1.8	5.5	20	Y	Y	Y	Y	4	Y	Y	3	1	12	2	4	3	1	2	1	7	28(27)	N, D		-	-	Y	-	-
	R5F21336A	32	4	2.5	1.8	5.5	20	Y	Y	Y	Y	4	Y	Y	3	1	12	2	4	3	1	2	1	7	28(27)	N, D		-	-	Y	-	-
R8C/34H	R5F21346H	32	-	2.5	2.7	5.5	20	Y	Y	-	Y	4	Y	Y	3	3	12	-	-	3	1	2	1	9	44(0)	J, K		-	-	-	Y	-
	R5F21347H	48	-	4.0	2.7	5.5	20	Y	Y	-	Y	4	Y	Y	3	3	12	-	-	3	1	2	1	9	44(0)	J, K		-	-	-	Y	-
	R5F21358H	64	-	6.0	2.7	5.5	20	Y	Y	-	Y	4	Y	Y	3	3	12	-	-	3	1	2	1	9	44(0)	J, K	WDTO	-	-	-	Y	-
	R5F2134AH	96	-	8.0	2.7	5.5	20	Y	Y	-	Y	4	Y	Y	3	3	12	-	-	3	1	2	1	9	44(0)	J, K		-	-	-	Y	-
	R5F2134CH	128	-	10.0	2.7	5.5	20	Y	Y	-	Y	4	Y	Y	3	3	12	-	-	3	1	2	1	9	44(0)	J, K		-	-	-	Y	-
R8C/34G	R5F21346G	32	4	2.5	2.7	5.5	20	Y	Y	-	Y	4	Y	Y	3	3	12	-	-	3	1	2	1	9	44(0)	J, K		-	-	-	Y	-
	R5F21347G	48	4	4.0	2.7	5.5	20	Y	Y	-	Y	4	Y	Y	3	3	12	-	-	3	1	2	1	9	44(0)	J, K		-	-	-	Y	-
	R5F21358G	64	4	6.0	2.7	5.5	20	Y	Y	-	Y	4	Y	Y	3	3	12	-	-	3	1	2	1	9	44(0)	J, K	WDTO, BGO	-	-	-	Y	-
	R5F2134AG	96	4	8.0	2.7	5.5	20	Y	Y	-	Y	4	Y	Y	3	3	12	-	-	3	1	2	1	9	44(0)	J, K		-	-	-	Y	-
	R5F2134CG	128	4	10.0	2.7	5.5	20	Y	Y	-	Y	4	Y	Y	3	3	12	-	-	3	1	2	1	9	44(0)	J, K		-	-	-	Y	-
R8C/35A	R5F21354A	16	4	1.5	1.8	5.5	20	Y	Y	Y	Y	4	Y	Y	3	3	12	2	4	3	1	2	1	7	48(47)	N, D		-	-	-	-	Y
	R5F21355A	24	4	2.0	1.8	5.5	20	Y	Y	Y	Y	4	Y	Y	3	3	12	2	4	3	1	2	1	7	48(47)	N, D		-	-	-	-	Y
	R5F21356A	32	4	2.5	1.8	5.5	20	Y	Y	Y	Y	4	Y	Y	3	3	12	2	4	3	1	2	1	7	48(47)	N, D		-	-	-	-	Y
	R5F21357A	48	4	4.0	1.8	5.5	20	Y	Y	Y	Y	4	Y	Y	3	3	12	2	4	3	1	2	1	7	48(47)	N, D	WDTO, BGO	-	-	-	-	Y
	R5F21358A	64	4	6.0	1.8	5.5	20	Y	Y	Y	Y	4	Y	Y	3	3	12	2	4	3	1	2	1	7	48(47)	N, D		-	-	-	-	Y
	R5F2135AA	96	4	8.0	1.8	5.5	20	Y	Y	Y	Y	4	Y	Y	3	3	12	2	4	3	1	2	1	7	48(47)	N, D		-	-	-	-	Y
	R5F2135CA	128	4	10.0	1.8	5.5	20	Y	Y	Y	Y	4	Y	Y	3	3	12	2	4	3	1	2	1	7	48(47)	N, D		-	-	-	-	Y

Notes:

1. Full part number format: [Base Part Number] [Temperature/Grade Code] [Package Suffix] [Production Type]
   Example: [R5F21356A] [D] [FP] [#U0] = R5F21356ADFP#U0 --> R8C/35A; 32KB+4KB; Industrial Temp; 52-pin LQFP; Tray Production
2. Some channels are shared. Check data sheet for details.
3. Refer to Appendix A-1 (Nomenclature of Part Number) for details.
4. Contact Renesas for availability

R8C/Lx Series

R8C/Lx Series Line-up

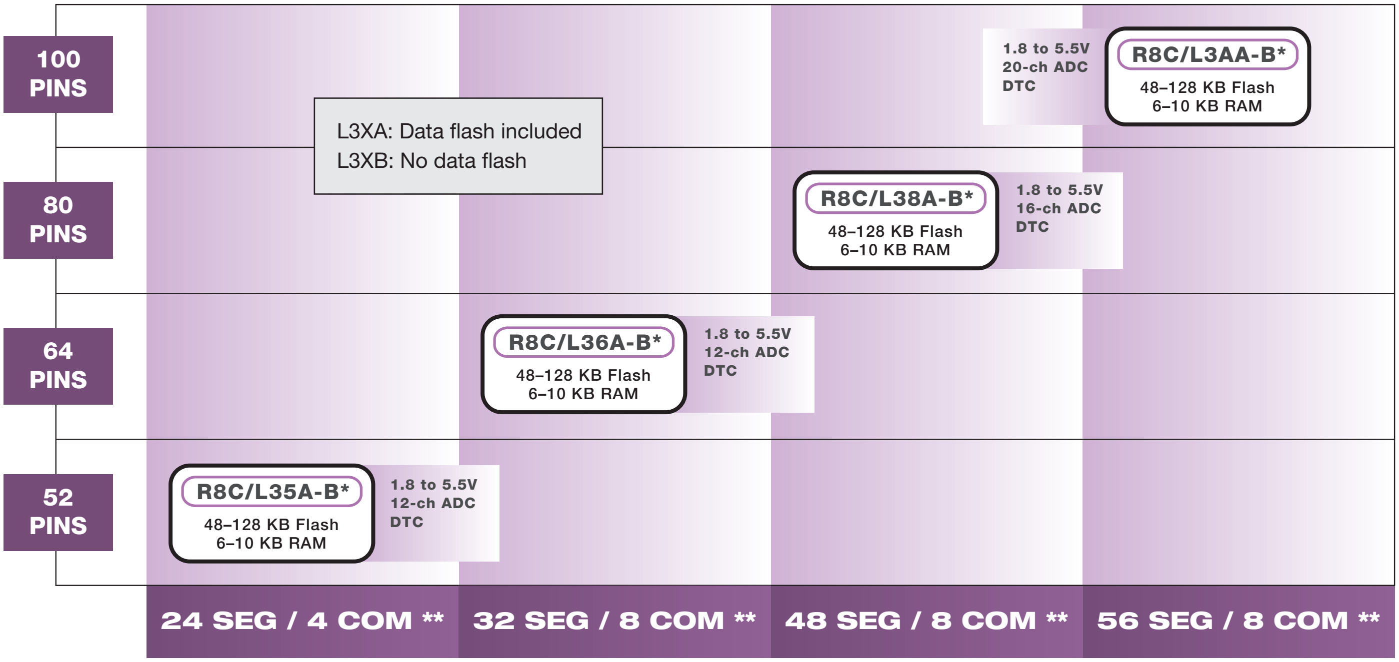

* Contact Renesas for details and availability ** Maximum number of Segment and Common lines

Features

- 16-bit R8C-based CPU with 16-bit multiplier and Data Transfer Controller
- Control up to 416 LCD segments/dots directly. Internal LCD voltage booster supporting 3V and 5V glass. Automatic blink option for each segment/dot
- Extensive power-down control including low-speed, wait, stop and power-off modes
- 40 MHz ±1% over temperature and voltage (Factory calibrated and guaranteed)
- Power-On Reset circuit with no Vcc rise time requirement

R8C/L3AA Block Diagram

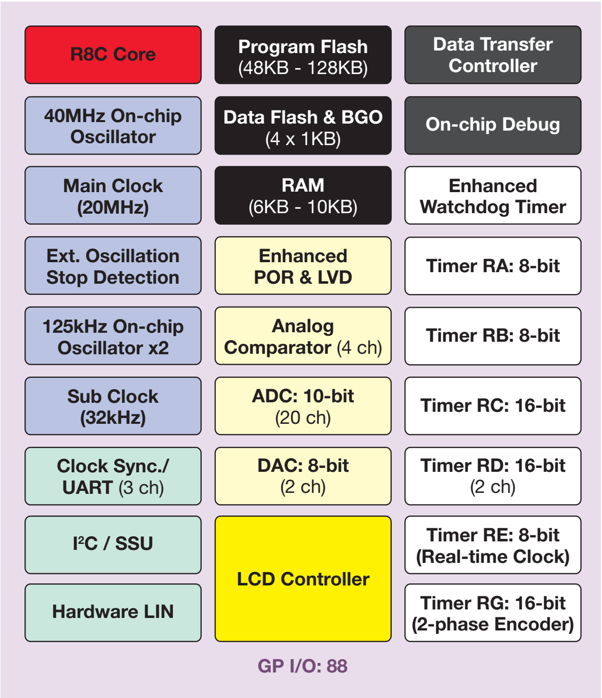

R8C/Lx Application Example

R8C/L3A Controlling a Security Alarm Panel

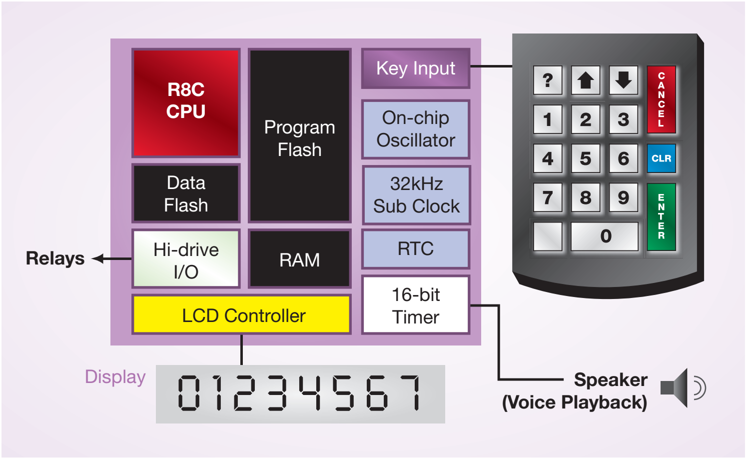

R8C/Lx Starter Kit*

R8C/L3AC Development Kit
(includes free compiler)

Part Number: R0K52L3ACS000BE

* available Q1 2009

R8C/Lx Series Selector Guide

Group [4]	Catalog Part Number (See Note 1)	Flash (Kbytes)	Data Flash (Kbytes)	RAM (Kbytes)	Vcc min	Vcc max	max MHz @ Vcc max	On-chip Oscillator	Oscillation Stop Detect	32 kHz Sub Clock	Power On Reset / Low Voltage Detect	Power Down Modes	On chip Debug	DTC	LCD SEG / COM Lines (Max.)	Timers		Analog			Communication (see note 2)				External Interrupts	GPIO (High Current)	Temp/Grade Code (Note 3)	Special Features	Package						
																8-bit timers	16-bit timers	A/D 10-bit resolution	D/A 8-bit resolution	Comparators	Serial (sync/async)	SSU (SPI Compatible)	I^2C	Hardware LIN					FP (PLQP0052JA-A, LQFP)	FP (PLQP0064GA-A, LQFP)	FP (PLQP0064KB-A, LQFP)	FP (PLQP0080KB-A, LQFP)	FP (PLQP0080JA-A, LQFP)	FP (PLQP0100KB-A, LQFP)	FP (PRQP0100JD-B, QFP)
R8C/L35A	R5F2L357A	48	4	6	1.8	5.5	20	Y	Y	Y	Y	5	Y	Y	24 / 4	3	4	12	2	4	3	1	2	1	9	41(5)	N, D	WDTO, BGO, Power-off mode	Y	-	-	-	-	-	-
	R5F2L358A	64	4	8	1.8	5.5	20	Y	Y	Y	Y	5	Y	Y	24 / 4	3	4	12	2	4	3	1	2	1	9	41(5)	N, D		Y	-	-	-	-	-	-
	R5F2L35AA	96	4	8	1.8	5.5	20	Y	Y	Y	Y	5	Y	Y	24 / 4	3	4	12	2	4	3	1	2	1	9	41(5)	N, D		Y	-	-	-	-	-	-
	R5F2L35CA	128	4	10	1.8	5.5	20	Y	Y	Y	Y	5	Y	Y	24 / 4	3	4	12	2	4	3	1	2	1	9	41(5)	N, D		Y	-	-	-	-	-	-
R8C/L35B	R5F2L357B	48	-	6	1.8	5.5	20	Y	Y	Y	Y	5	Y	Y	24 / 4	3	4	12	2	4	3	1	2	1	9	41(5)	N, D	WDTO, Power-off mode	Y	-	-	-	-	-	-
	R5F2L358B	64	-	8	1.8	5.5	20	Y	Y	Y	Y	5	Y	Y	24 / 4	3	4	12	2	4	3	1	2	1	9	41(5)	N, D		Y	-	-	-	-	-	-
	R5F2L35AB	96	-	8	1.8	5.5	20	Y	Y	Y	Y	5	Y	Y	24 / 4	3	4	12	2	4	3	1	2	1	9	41(5)	N, D		Y	-	-	-	-	-	-
	R5F2L35CB	128	-	10	1.8	5.5	20	Y	Y	Y	Y	5	Y	Y	24 / 4	3	4	12	2	4	3	1	2	1	9	41(5)	N, D		Y	-	-	-	-	-	-
R8C/L36A	R5F2L367A	48	4	6	1.8	5.5	20	Y	Y	Y	Y	5	Y	Y	32 / 8	3	4	12	2	4	3	1	2	1	9	52(8)	N, D	WDTO, BGO, Power-off mode	-	Y	Y	-	-	-	-
	R5F2L368A	64	4	8	1.8	5.5	20	Y	Y	Y	Y	5	Y	Y	32 / 8	3	4	12	2	4	3	1	2	1	9	52(8)	N, D		-	Y	Y	-	-	-	-
	R5F2L36AA	96	4	8	1.8	5.5	20	Y	Y	Y	Y	5	Y	Y	32 / 8	3	4	12	2	4	3	1	2	1	9	52(8)	N, D		-	Y	Y	-	-	-	-
	R5F2L36CA	128	4	10	1.8	5.5	20	Y	Y	Y	Y	5	Y	Y	32 / 8	3	4	12	2	4	3	1	2	1	9	52(8)	N, D		-	Y	Y	-	-	-	-
R8C/L36B	R5F2L367B	48	-	6	1.8	5.5	20	Y	Y	Y	Y	5	Y	Y	32 / 8	3	4	12	2	4	3	1	2	1	9	52(8)	N, D	WDTO, Power-off mode	-	Y	Y	-	-	-	-
	R5F2L368B	64	-	8	1.8	5.5	20	Y	Y	Y	Y	5	Y	Y	32 / 8	3	4	12	2	4	3	1	2	1	9	52(8)	N, D		-	Y	Y	-	-	-	-
	R5F2L36AB	96	-	8	1.8	5.5	20	Y	Y	Y	Y	5	Y	Y	32 / 8	3	4	12	2	4	3	1	2	1	9	52(8)	N, D		-	Y	Y	-	-	-	-
	R5F2L36CB	128	-	10	1.8	5.5	20	Y	Y	Y	Y	5	Y	Y	32 / 8	3	4	12	2	4	3	1	2	1	9	52(8)	N, D		-	Y	Y	-	-	-	-
R8C/L38A	R5F2L387A	48	4	6	1.8	5.5	20	Y	Y	Y	Y	5	Y	Y	48 / 8	3	4	16	2	4	3	1	2	1	9	68(8)	N, D	WDTO, BGO, Power-off mode	-	-	-	Y	Y	-	-
	R5F2L388A	64	4	8	1.8	5.5	20	Y	Y	Y	Y	5	Y	Y	48 / 8	3	4	16	2	4	3	1	2	1	9	68(8)	N, D		-	-	-	Y	Y	-	-
	R5F2L38AA	96	4	8	1.8	5.5	20	Y	Y	Y	Y	5	Y	Y	48 / 8	3	4	16	2	4	3	1	2	1	9	68(8)	N, D		-	-	-	Y	Y	-	-
	R5F2L38CA	128	4	10	1.8	5.5	20	Y	Y	Y	Y	5	Y	Y	48 / 8	3	4	16	2	4	3	1	2	1	9	68(8)	N, D		-	-	-	Y	Y	-	-
R8C/L38B	R5F2L387B	48	-	6	1.8	5.5	20	Y	Y	Y	Y	5	Y	Y	48 / 8	3	4	16	2	4	3	1	2	1	9	68(8)	N, D	WDTO, Power-off mode	-	-	-	Y	Y	-	-
	R5F2L388B	64	-	8	1.8	5.5	20	Y	Y	Y	Y	5	Y	Y	48 / 8	3	4	16	2	4	3	1	2	1	9	68(8)	N, D		-	-	-	Y	Y	-	-
	R5F2L38AB	96	-	8	1.8	5.5	20	Y	Y	Y	Y	5	Y	Y	48 / 8	3	4	16	2	4	3	1	2	1	9	68(8)	N, D		-	-	-	Y	Y	-	-
	R5F2L38CB	128	-	10	1.8	5.5	20	Y	Y	Y	Y	5	Y	Y	48 / 8	3	4	16	2	4	3	1	2	1	9	68(8)	N, D		-	-	-	Y	Y	-	-
R8C/L3AA	R5F2L3A7A	48	4	6	1.8	5.5	20	Y	Y	Y	Y	5	Y	Y	56 / 8	3	4	20	2	4	3	1	2	1	9	88(16)	N, D	WDTO, BGO, Power-off mode	-	-	-	-	-	Y	Y
	R5F2L3A8A	64	4	8	1.8	5.5	20	Y	Y	Y	Y	5	Y	Y	56 / 8	3	4	20	2	4	3	1	2	1	9	88(16)	N, D		-	-	-	-	-	Y	Y
	R5F2L3AAA	96	4	8	1.8	5.5	20	Y	Y	Y	Y	5	Y	Y	56 / 8	3	4	20	2	4	3	1	2	1	9	88(16)	N, D		-	-	-	-	-	Y	Y
	R5F2L3ACA	128	4	10	1.8	5.5	20	Y	Y	Y	Y	5	Y	Y	56 / 8	3	4	20	2	4	3	1	2	1	9	88(16)	N, D		-	-	-	-	-	Y	Y
R8C/L3AB	R5F2L3A7B	48	-	6	1.8	5.5	20	Y	Y	Y	Y	5	Y	Y	56 / 8	3	4	20	2	4	3	1	2	1	9	88(16)	N, D	WDTO, Power-off mode	-	-	-	-	-	Y	Y
	R5F2L3A8B	64	-	8	1.8	5.5	20	Y	Y	Y	Y	5	Y	Y	56 / 8	3	4	20	2	4	3	1	2	1	9	88(16)	N, D		-	-	-	-	-	Y	Y
	R5F2L3AAB	96	-	8	1.8	5.5	20	Y	Y	Y	Y	5	Y	Y	56 / 8	3	4	20	2	4	3	1	2	1	9	88(16)	N, D		-	-	-	-	-	Y	Y
	R5F2L3ACB	128	-	10	1.8	5.5	20	Y	Y	Y	Y	5	Y	Y	56 / 8	3	4	20	2	4	3	1	2	1	9	88(16)	N, D		-	-	-	-	-	Y	Y

Notes:

1. Full part number format: [Base Part Number] [Temperature/Grade Code] [Package Suffix] [Production Type]
   Example: [R5F2L358A] [D] [FP] [#U0] = R5F2L358ADFP#U0 --> R8C/L35A; 64KB + 4KB; Industrial Temp; 52-pin LQFP; Tray Production
2. Some channels are shared. Check data sheet for details.
3. Refer to Appendix A-1 (Nomenclature of Part Number) for details.
4. Contact Renesas for availability

M16C Tiny Series

M16C Tiny Series Line-up

	M16C/26A (2.7 - 5.5 V) (Up to 24MHz, Motor Control Timer)	M16C/28 (2.7 - 5.5 V) (Up to 24MHz, Motor Control Timer, HW multi-master I²C)	M16C/29 (2.7 - 5.5 V) (Up to 20MHz, M16C/28 feature + 1 ch CAN
80 PINS		M16C/28 48-128KB Flash 4-12KB RAM	M16C/29 96-128KB Flash 8-12KB RAM
64 PINS		M16C/28 48-128KB Flash 4-12KB RAM	M16C/29 96-128KB Flash 8-12KB RAM
48 PINS	M16C/26A 24-64KB Flash 1-2KB RAM		

Features

- High-performance 16-bit CPU with 16-bit HW multiplier
- High-speed option (24MHz@5V) available
- 4 KB data flash memory to replace external EEPROM
- Small package options (i.e., 7mm x 7mm 48 LQFP or 85 FLGA)
- 3 phase motor control timer with dead-time function and A/D with two sample & holds
- High reliability features including CRC, WDT with independent on-chip oscillator, oscillation-stop detection and built-in noise cancellation circuits

M16C Tiny Application Example

Brushless DC Motor Control (with Hall Scan)

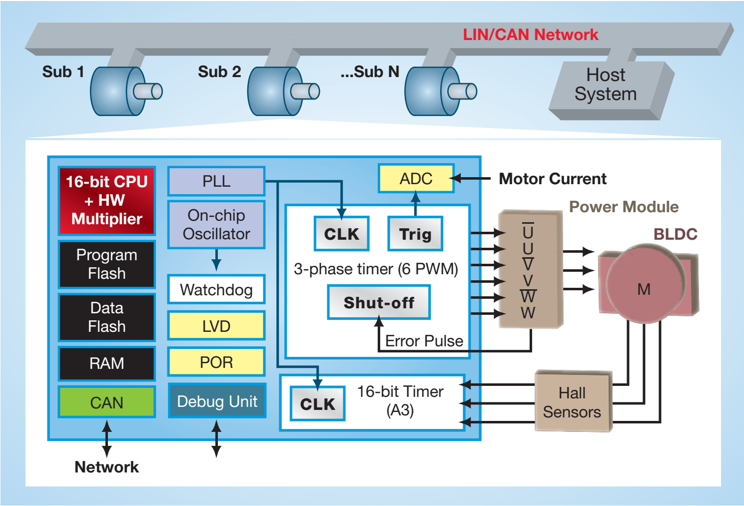

M16C/29 Block Diagram

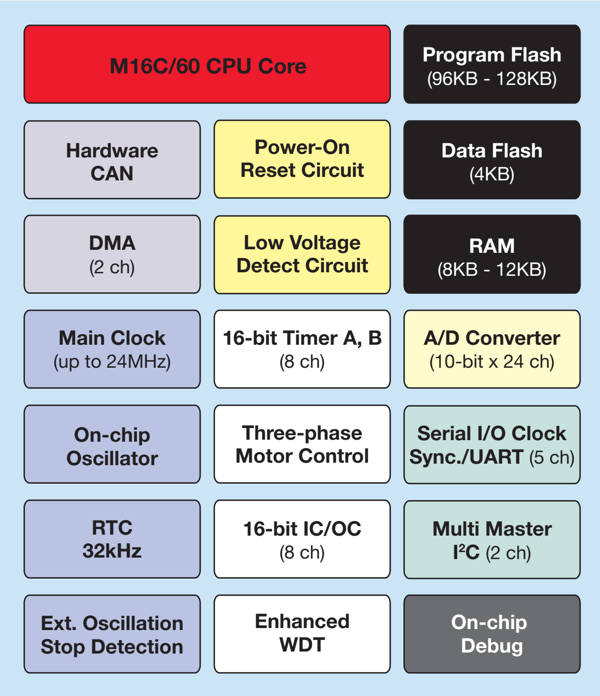

GET STARTED NOW!

M16C/Tiny Development Kit
(includes free compiler)

Part Number:
R0K330290S000BE

M16C Tiny Series Selector Guide

Group	Catalog Part Number	ROM Size (Kbytes)	Data Flash (Kbytes)	Non Data Flash Version Available	RAM (Kbytes)	External Data Bus	Vcc min	Vcc max	max MHz @ Vcc max	On-chip Oscillator	Oscillation Stop Detect	PLL	32 kHz Sub Clock	Power On Reset	Low Votage Detect	Power Down Modes	On chip Debug	Timers		A/D 10-bit resolution	Serial			DMA Channels	External Interrupts	GPIO	Special Features	Mask ROM Available	Automotive Temp. and Grade Available	Industrial Temp. (-40 to 85C) Available	Package Suffix (Code, Type)				
																		16-bit timers	Watchdog Timers		Serial (sync/async)	I2C	CAN								GP (PLQP0048KB-A, LQFP)	HP (PLQP0064KB-A, LQFP)	HP (PLQP0080KB-A, LQFP)	FP (PRSP0042GA-B, SSOP)	WG (PTLG0085JB-A, TFLGA)
26A	M30260F3AGP	24	4	Y	1	-	2.7	5.5	20	Y	Y	Y	Y	Y	Y	4	Y	8	1	12	3	1	-	2	8	39	CRC,1-ch IEBus, 3-phase PWM Motor Control Timers	Y	T,V	Y	Y	-	-	-	-
	M30263F3AFP	24	4	Y	1	-	2.7	5.5	20	Y	Y	Y	Y	Y	Y	4	Y	8	1	10	1	1	-	2	8	33		Y	-	Y	-	-	-	Y	-
	M30260F6AGP	48	4	Y	2	-	2.7	5.5	20	Y	Y	Y	Y	Y	Y	4	Y	8	1	12	3	1	-	2	8	39		Y	T,V	Y	Y	-	-	-	-
	M30263F6AFP	48	4	Y	2	-	2.7	5.5	20	Y	Y	Y	Y	Y	Y	4	Y	8	1	10	1	1	-	2	8	33		Y	-	Y	-	-	-	Y	-
	M30260F8AGP	64	4	Y	2	-	2.7	5.5	20	Y	Y	Y	Y	Y	Y	4	Y	8	1	12	3	1	-	2	8	39		Y	T,V	Y	Y	-	-	-	-
	M30263F8AFP	64	4	Y	2	-	2.7	5.5	20	Y	Y	Y	Y	Y	Y	4	Y	8	1	10	1	1	-	2	8	33		Y	-	Y	-	-	-	Y	-
26B	M30260F8BGP	64	4	-	2	-	4.2	5.5	24	Y	Y	Y	Y	Y	Y	4	Y	8	1	12	3	1	-	2	8	39		-	-	Y	Y	-	-	-	-
	M30263F8BFP	64	4	-	2	-	4.2	5.5	24	Y	Y	Y	Y	Y	Y	4	Y	8	1	10	1	1	-	2	8	33		-	-	Y	-	-	-	Y	-
28	M30280F6HP	48	4	Y	4	-	2.7	5.5	20	Y	Y	Y	Y	Y	Y	4	Y	9	1	24	5	2	-	2	8	71	1-ch IEBus, 3-phase PWM Motor Control Timer, 1-ch 16-bit IC/OC, HW Multi-master I²C	Y	T,V	Y	-	-	Y	-	-
	M30280F6WG	48	4	Y	4	-	2.7	5.5	20	Y	Y	Y	Y	Y	Y	4	Y	9	1	24	5	2	-	2	8	71		-	-	Y	-	-	-	-	Y
	M30281F6HP	48	4	Y	4	-	2.7	5.5	20	Y	Y	Y	Y	Y	Y	4	Y	9	1	13	4	2	-	2	8	55		Y	T,V	Y	-	Y	-	-	-
	M30280F8HP	64	4	Y	4	-	2.7	5.5	20	Y	Y	Y	Y	Y	Y	4	Y	9	1	24	5	2	-	2	8	71		Y	T,V	Y	-	-	Y	-	-
	M30280F8WG	64	4	Y	4	-	2.7	5.5	20	Y	Y	Y	Y	Y	Y	4	Y	9	1	24	5	2	-	2	8	71		-	-	Y	-	-	-	-	Y
	M30281F8HP	64	4	Y	4	-	2.7	5.5	20	Y	Y	Y	Y	Y	Y	4	Y	9	1	13	4	2	-	2	8	55		Y	T,V	Y	-	Y	-	-	-
	M30280FAHP	96	4	Y	8	-	2.7	5.5	20	Y	Y	Y	Y	Y	Y	4	Y	9	1	24	5	2	-	2	8	71		Y	T,V	Y	-	-	Y	-	-
	M30280FAWG	96	4	Y	8	-	2.7	5.5	20	Y	Y	Y	Y	Y	Y	4	Y	9	1	24	5	2	-	2	8	71		-	-	Y	-	-	-	-	Y
	M30281FAHP	96	4	Y	8	-	2.7	5.5	20	Y	Y	Y	Y	Y	Y	4	Y	9	1	13	4	2	-	2	8	55		Y	T,V	Y	-	Y	-	-	-
	M30280FCHP	128	4	Y	12	-	2.7	5.5	20	Y	Y	Y	Y	Y	Y	4	Y	9	1	24	5	2	-	2	8	71		Y	T,V	Y	-	-	Y	-	-
	M30281FCHP	128	4	Y	12	-	2.7	5.5	20	Y	Y	Y	Y	Y	Y	4	Y	9	1	13	4	2	-	2	8	55		Y	T,V	Y	-	Y	-	-	-
28B	M30280FBCHP	128	4	-	12	-	4.2	5.5	24	Y	Y	Y	Y	Y	Y	4	Y	9	1	24	5	2	-	2	8	71		-	-	Y	-	-	Y	-	-
	M30281FCBHP	128	4	-	12	-	4.2	5.5	24	Y	Y	Y	Y	Y	Y	4	Y	9	1	13	4	2	-	2	8	55		-	-	Y	-	Y	-	-	-
29	M30290F8HP	64	4	Y	4	-	2.7	5.5	20	Y	Y	Y	Y	Y	Y	4	Y	9	1	27	5	2	1	2	8	71	1-ch IEBus, 3-phase PWM Motor Control Timer, 1-ch 16-bit IC/OC, HW Multi-master I²C, 1ch CAN	Y	T,V	Y	-	-	Y	-	-
	M30291F8HP	64	4	Y	4	-	2.7	5.5	20	Y	Y	Y	Y	Y	Y	4	Y	9	1	16	4	2	1	2	8	55		Y	T,V	Y	-	Y	-	-	-
	M30290FAHP	96	4	Y	8	-	2.7	5.5	20	Y	Y	Y	Y	Y	Y	4	Y	9	1	27	5	2	1	2	8	71		Y	T,V	Y	-	-	Y	-	-
	M30291FAHP	96	4	Y	8	-	2.7	5.5	20	Y	Y	Y	Y	Y	Y	4	Y	9	1	16	4	2	1	2	8	55		Y	T,V	Y	-	Y	-	-	-
	M30290FCHP	128	4	Y	12	-	2.7	5.5	20	Y	Y	Y	Y	Y	Y	4	Y	9	1	27	5	2	1	2	8	71		Y	T,V	Y	-	-	Y	-	-
	M30291FCHP	128	4	Y	12	-	2.7	5.5	20	Y	Y	Y	Y	Y	Y	4	Y	9	1	16	4	2	1	2	8	55		Y	T,V	Y	-	Y	-	-	-

Flash Access Specifications:

Standard temperature: #U5
Extended temperature: #U3
Standard temperature with data flash: #U9
Extended temperature with data flash: #U7

Autmotive Temperature & Grade

-40 to 85C : T version
-40 to 125C : V version

M16C/62P, 63, 64, 65, and 6C Series

M16C/6X Series Line-up

	62P (Standard)	63 (Low Power)	64 (Cost Reduced)	65 (Performance)	6C (USB Device)
128 PINS	M16C/62P 256-512KB Flash 20-31KB RAM			M16C/65 256-768KB Flash 20-47KB RAM	
100 PINS	M16C/62P 0-512KB Flash 4-31KB RAM	M16C/63 128-512KB Flash 12-31KB RAM	M16C/64 128-512KB Flash 12-31KB RAM	M16C/65 128-768KB Flash 12-47KB RAM	M16C/6C 128-512KB Flash 12-31KB RAM
80 PINS	M16C/62P 64-128KB Flash 4-10KB RAM	M16C/63 128-256KB Flash 12-20KB RAM		M16C/65 128KB Flash 12KB RAM	

Features

- Expanded features and integration from M16C/62P
- Operation at 32MHz
- Memory density up to 768KB Flash and 47KB SRAM
- 4 DMA channels
- 8 Serial Communication Ports
- Faster ADC conversion of 1.72µs @ 25MHz
- On-chip power-on reset
- On-chip 1-week RTC
- On-chip remote control receiver
- On-chip CEC* circuit
- Enhanced on-chip debugging function (OCD)

*CEC – Consumer Electronics Control

M16C/65 Application Example: *DVD Recorder*

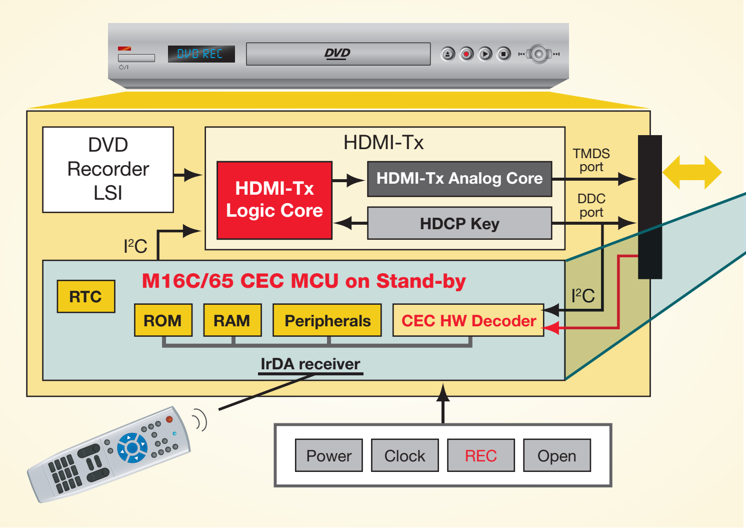

M16C/65 Block Diagram (100-pin version)

M16C/60 CPU Core: 32MHz	Flash Memory 128KB to 768KB	A/D Converter (10-bit x 26 ch)
16-bit Multiplier	Data Flash 4KB x 2	D/A Converter (8-bit x 2 ch)
DMAC (4 ch)	RAM 12KB to 47KB	PWM (2 ch)
Interrupt	User Boot 16KB	LVD & POR
32kHz Sub Clock	On-chip Debug	Multi-master I²C bus
Main Clock (up to 24MHz)	16-bit Timer A: 5 ch 16-bit Timer B: 6 ch	Serial I/O/UART/ I²C/IEBus (6 ch)
On-chip Oscillator High Speed: 40MHz	WDT	Serial I/O Clock Sync. (2 ch)
On-chip Oscillator Low Speed: 125MHz	Three-phase Motor Control	Receive Remote
RTC: 1 week	PLL	CRC
CEC	88 I/O pins	

GET STARTED NOW!

M16C/65 Development Kit
(includes free compiler)

Part Number:
R0K330650S000BE

M16C/6X Series Selector Guide

														Timers			Analog		Comm. (Note 2)												Package					
Group	Catalog Part Number (See Note 1)	Flash (Kbytes)	Data Flash (Kbytes)	RAM (Kbytes)	Vcc min	Vcc max	max MHz @ Vcc max	On-chip Oscillator	Oscillation Stop Detect	32 kHz Sub Clock	Power On Reset / Low Voltage Detect	Power Down Modes	On chip Debug	WDT	16-bit timers	RTC (W:weekly Y:yearly)	A/D 10-bit resolution	D/A 8-bit resolution	Serial (sync/async)	SPI Compatible	I²C	Multi-master I2C	USB Device	CEC	DMA Channels	External Interrupts	External Data Bus	GPIO (High Current)	Temp/Grade Code (Note 3)	Special Features	GP/FP (PLQP0080JA-A, LQFP)	FE (PLQP0080KB-A, LQFP)	GP/FB (PLQP0100KB-A, LQFP)	FA (PRQP0100JD-B, QFP)	FP (PRQP0100JB-A, QFP)	GP/FC (PLQP0128KB-A, LQFP)
M16C62P	M30622SPFP	-	-	4	2.7	5.5	24	Y	Y	Y	Y	4	Y	1	11	1	26	2	5	5	3	-	-	-	2	8	Y	88	-	16-bit Multiplier, 3-phase Motor Control, PWM, CRC, 3V/5V Power Supply	-	-	-	-	Y	-
	M30622SPGP	-	-	4	2.7	5.5	24	Y	Y	Y	Y	4	Y	1	11	1	26	2	5	5	3	-	-	-	2	8	Y	88	-		-	-	Y	-	-	-
	M30620SPFP	-	-	10	2.7	5.5	24	Y	Y	Y	Y	4	Y	1	11	1	26	2	5	5	3	-	-	-	2	8	Y	88	-		-	-	-	-	Y	-
	M30620SPGP	-	-	10	2.7	5.5	24	Y	Y	Y	Y	4	Y	1	11	1	26	2	5	5	3	-	-	-	2	8	Y	88	-		-	-	Y	-	-	-
	M30624SPFP	-	-	20	2.7	5.5	24	Y	Y	Y	Y	4	Y	1	11	1	26	2	5	5	3	-	-	-	2	8	Y	88	-		-	-	-	-	Y	-
	M30624SPGP	-	-	20	2.7	5.5	24	Y	Y	Y	Y	4	Y	1	11	1	26	2	5	5	3	-	-	-	2	8	Y	88	-		-	-	Y	-	-	-
	M30626SPFP	-	-	31	2.7	5.5	24	Y	Y	Y	Y	4	Y	1	11	1	26	2	5	5	3	-	-	-	2	8	Y	88	-		-	-	-	-	Y	-
	M30626SPGP	-	-	31	2.7	5.5	24	Y	Y	Y	Y	4	Y	1	11	1	26	2	5	5	3	-	-	-	2	8	Y	88	-		-	-	Y	-	-	-
	M30622F8PFP	64	4	4	2.7	5.5	24	Y	Y	Y	Y	4	Y	1	11	1	26	2	5	5	3	-	-	-	2	8	Y	88	T		-	-	-	-	Y	-
	M30622F8PGP	64	4	4	2.7	5.5	24	Y	Y	Y	Y	4	Y	1	11	1	26	2	5	5	3	-	-	-	2	8	Y	88	T		-	-	Y	-	-	-
	M30623F8PGP	64	4	4	2.7	5.5	24	Y	Y	Y	Y	4	Y	1	11	1	26	2	5	5	3	-	-	-	2	5	Y	71	-		-	-	-	-	-	Y
	M30620FCPFP	128	4	10	2.7	5.5	24	Y	Y	Y	Y	4	Y	1	11	1	26	2	5	5	3	-	-	-	2	8	Y	88	T, V		-	-	-	-	Y	-
	M30620FCPGP	128	4	10	2.7	5.5	24	Y	Y	Y	Y	4	Y	1	11	1	26	2	5	5	3	-	-	-	2	8	Y	88	T, V		-	-	Y	-	-	-
	M30621FCPGP	128	4	10	2.7	5.5	24	Y	Y	Y	Y	4	Y	1	11	1	26	2	5	5	3	-	-	-	2	5	Y	71	-		-	-	-	-	-	Y
	M3062LFGPFP	256	4	20	2.7	5.5	24	Y	Y	Y	Y	4	Y	1	11	1	26	2	5	5	3	-	-	-	2	8	Y	88	-		-	-	-	-	Y	-
	M3062LFGPGP	256	4	20	2.7	5.5	24	Y	Y	Y	Y	4	Y	1	11	1	26	2	5	5	3	-	-	-	2	8	Y	88	-		-	-	Y	-	-	-
	M30625FGPGP	256	4	20	2.7	5.5	24	Y	Y	Y	Y	4	Y	1	11	1	26	2	5	5	3	-	-	-	2	8	Y	114	-		-	-	-	-	-	Y
	M30626FHPFP	384	4	31	2.7	5.5	24	Y	Y	Y	Y	4	Y	1	11	1	26	2	5	5	3	-	-	-	2	8	Y	88	T, V		-	-	-	-	Y	-
	M30626FHPGP	384	4	31	2.7	5.5	24	Y	Y	Y	Y	4	Y	1	11	1	26	2	5	5	3	-	-	-	2	8	Y	88	T, V		-	-	Y	-	-	-
	M30627FHPGP	384	4	31	2.7	5.5	24	Y	Y	Y	Y	4	Y	1	11	1	26	2	5	5	3	-	-	-	2	8	Y	114	-		-	-	-	-	-	Y
	M30626FJPFP	512	4	31	2.7	5.5	24	Y	Y	Y	Y	4	Y	1	11	1	26	2	5	5	3	-	-	-	2	8	Y	88	-		-	-	-	-	Y	-
	M30626FJPGP	512	4	31	2.7	5.5	24	Y	Y	Y	Y	4	Y	1	11	1	26	2	5	5	3	-	-	-	2	8	Y	88	-		-	-	Y	-	-	-
	M30627FJPGP	512	4	31	2.7	5.5	24	Y	Y	Y	Y	4	Y	1	11	1	26	2	5	5	3	-	-	-	2	8	Y	114	-		-	-	-	-	-	Y
M16C/63	R5F36306	128	8	12	1.8	5.5	20	Y	Y	Y	Y	4	Y	1	11	Y	26	2	8	8	7	1	-	Y	4	13	Y	88	N, D	Low Power, 3-Phase Motor Control, CRC	-	-	Y	Y	-	-
	R5F36326	128	8	12	1.8	5.5	20	Y	Y	Y	Y	4	Y	1	11	Y	26	2	6	6	5	1	-	Y	4	10	-	71	N, D		-	Y	-	-	-	-
	R5F3630E	256	8	20	1.8	5.5	20	Y	Y	Y	Y	4	Y	1	11	Y	26	2	8	8	7	1	-	Y	4	13	Y	88	N, D		-	-	Y	Y	-	-
	R5F3632E	256	8	20	1.8	5.5	20	Y	Y	Y	Y	4	Y	1	11	Y	26	2	6	6	5	1	-	Y	4	10	-	71	N, D		-	Y	-	-	-	-
M16C/64	R5F36406	128	8	12	2.7	5.5	25	Y	Y	Y	Y	4	Y	1	11	-	26	2	8	8	6	-	-	-	4	13	Y	88	N, D	3-Phase Motor Control, CRC	-	-	Y	Y	-	-
	R5F3640D	256	8	16	2.7	5.5	25	Y	Y	Y	Y	4	Y	1	11	-	26	2	8	8	6	-	-	-	4	13	Y	88	N, D		-	-	Y	Y	-	-
	R5F3640M	512	8	31	2.7	5.5	25	Y	Y	Y	Y	4	Y	1	11	-	26	2	8	8	6	-	-	-	4	13	Y	88	N, D		-	-	Y	Y	-	-
M16C/65	R5F36506	128	8	12	2.7	5.5	32	Y	Y	Y	Y	4	Y	1	11	w	26	2	8	8	7	1	-	Y	4	13	Y	88	N, D	3-Phase Motor Control, CRC	-	-	Y	Y	-	-
	R5F36526	128	8	12	2.7	5.5	32	Y	Y	Y	Y	4	Y	1	11	w	26	2	6	6	5	1	-	Y	4	10	Y	71	N, D		Y	-	-	-	-	-
	R5F3650E	256	8	20	2.7	5.5	32	Y	Y	Y	Y	4	Y	1	11	w	26	2	8	8	7	1	-	Y	4	13	Y	88	N, D		-	-	Y	Y	-	-
	R5F3651E	256	8	20	2.7	5.5	32	Y	Y	Y	Y	4	Y	1	11	w	26	2	8	8	7	1	-	Y	4	13	Y	114	N, D		-	-	-	-	-	Y
	R5F3650K	384	8	31	2.7	5.5	32	Y	Y	Y	Y	4	Y	1	11	w	26	2	8	8	7	1	-	Y	4	13	Y	88	N, D		-	-	Y	Y	-	-
	R5F3651K	384	8	31	2.7	5.5	32	Y	Y	Y	Y	4	Y	1	11	w	26	2	8	8	7	1	-	Y	4	13	Y	114	N, D		-	-	-	-	-	Y
	R5F3650M	512	8	31	2.7	5.5	32	Y	Y	Y	Y	4	Y	1	11	w	26	2	8	8	7	1	-	Y	4	13	Y	88	N, D		-	-	Y	Y	-	-
	R5F3651M	512	8	31	2.7	5.5	32	Y	Y	Y	Y	4	Y	1	11	w	26	2	8	8	7	1	-	Y	4	13	Y	114	N, D		-	-	-	-	-	Y
	R5F3650R	640	8	47	2.7	5.5	32	Y	Y	Y	Y	4	Y	1	11	w	26	2	8	8	7	1	-	Y	4	13	Y	88	N, D		-	-	Y	Y	-	-
	R5F3651R	640	8	47	2.7	5.5	32	Y	Y	Y	Y	4	Y	1	11	w	26	2	8	8	7	1	-	Y	4	13	Y	114	N, D		-	-	-	-	-	Y
	R5F3650T	768	8	47	2.7	5.5	32	Y	Y	Y	Y	4	Y	1	11	w	26	2	8	8	7	1	-	Y	4	13	Y	88	N, D		-	-	Y	Y	-	-
	R5F3651T	768	8	47	2.7	5.5	32	Y	Y	Y	Y	4	Y	1	11	w	26	2	8	8	7	1	-	Y	4	13	Y	114	N, D		-	-	-	-	-	Y
M16C/6C	R5F36C0K	384	8	31	2.7	5.5	32	Y	Y	Y	Y	4	Y	1	11	Y	26	2	6	1	2	1	1	-	4	13	Y	88	D	USB, 3-Phase Motor Control, CRC	-	-	Y	-	-	-
	R5F36C0M	512	8	31	2.7	5.5	32	Y	Y	Y	Y	4	Y	1	11	Y	26	2	6	1	2	1	1	-	4	13	Y	88	D		-	-	Y	-	-	-

* Contact Renesas for product derivatives and availability.

Notes:

1. See Appendices for Part Number format
2. Some channels are shared. Check data sheet for details.
3. Refer to Appendices for details.

Extended Temperature Codes:

D	-40 TO 85	V	Automotive -40 to 125
N	-20 TO 85	J	Automotive -40 to 85
T	Automotive -40 to 85	L	Automotive -40 to 105
U	Automotive -40 to 105	K	Automotive -40 to 125

R32C Series Line-up

	R32C/111	R32C/116	R32C/117	R32C/118
144 PINS		R32C/116 384-1024KB Flash 40-63KB RAM	R32C/117 384-1024KB Flash 40-63KB RAM	R32C/118 640-1024KB Flash 48-63KB RAM
100 PINS	R32C/111 256-512KB Flash 40-63KB RAM	R32C/116 384-1024KB Flash 40-63KB RAM	R32C/117 384-1024KB Flash 40-63KB RAM	R32C/118 640-1024KB Flash 48-63KB RAM
64 PINS	R32C/111 256-512KB Flash 31-63KB RAM			
	R32C/111 Up to 50MHz, Large SRAM	**R32C/116** Up to 50MHz, Large Flash	**R32C/117** Up to 50MHz, Large Flash, +1 ch CAN	**R32C/118** Up to 50MHz, Large Flash, +2 ch CAN

Features

- 32-bit CISC MCUs inheriting the M16C/M32C features and employing R32C/100 Series CPU core
- 32-bit barrel shifter, 32-bit multiplier, and high-precision inline FPU on-chip
- Performs 32-bit x 32-bit multiply-accumulate operations in one clock cycle
- Register bit length extended from M32C/80 and number of registers increased
- 64-bit internal memory bus
- Short jumps with no penalty
- Enhanced Communication Function (SIO x 9 channels)

R32C Application Example: *Automated Meter Reading*

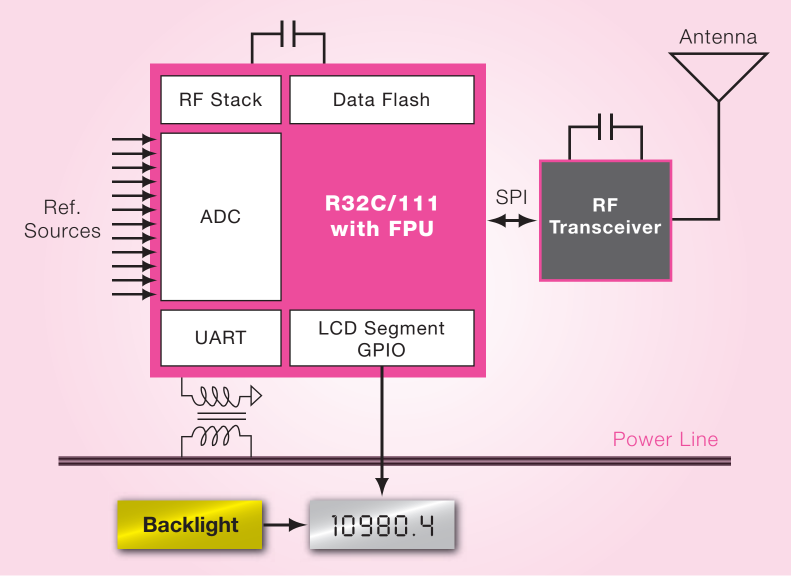

R32C/111 Block Diagram

R32C/100 CPU Core: 50MHz	**Flash** MAX 512KB With Protect	**RAM** MAX 63KB
32-bit Multiplier	**32kHz Sub Clock**	**Timer A** (5 ch) **Timer B** (6 ch)
DMAC (4 ch)	**FPU** R32C/100 with FPU CPU Core: 50MHz	**Intelligent I/O** (3 ch)
DMA-II	**PLL**	**WDT**
X/Y Converter (1 ch)	**A/D Converter** (10-bit x 34 ch)	**CRC**
Interrupt	**D/A Converter** (8-bit x 2 ch)	**Serial I/O** (9 ch)

GET STARTED NOW!

R32C/111 Starter Kit
(includes free compiler)

Part Number:
R0K564112S000BE

RENESAS R32C

R32C Series Selector Guide

Group	Catalog Part Number (See Note 1)	Flash (Kbytes)	Data Flash (Kbytes)	RAM (Kbytes)	Vcc min	Vcc max	max MHz @ Vcc max	On-chip Oscillator	Oscillation Stop Detect	32 kHz Sub Clock	Power On Reset / Low Voltage Detect	Power Down Modes	On chip Debug	Timers			Analog		Comm. (Note 2)				DMA Channels	DMAC-II	External Interrupts	External Data Bus	Maximum GPIO	Temp/Grade Code (Note 3)	Special Features	Package			
														8-bit timers	16-bit timers	Intelligent I/O	A/D 10-bit resolution	D/A 8-bit resolution	Serial (sync/async)	SPI Compatible	I²C	CAN								FN (PLQP0064KB-A, LQFP)	FP (PLQP0080KB-A, LQFP)	FB (PLQP0100KB-A, LQFP)	FD (PLQP0144KA-A, LQFP)
R32C/111	R5F64110	256	8	40	3.0	5.5	50	Y	Y	Y	Y	4	Y	-	11	19	26	2	9	7	7	-	4	Y	6	Y	86	N, D	Floating Point Unit (FPU), WDTO	Y	Y	Y	-
	R5F64111	384	8	40	3.0	5.5	50	Y	Y	Y	Y	4	Y	-	11	19	26	2	9	7	7	-	4	Y	6	Y	86	N, D		Y	Y	Y	-
	R5F64112	512	8	40	3.0	5.5	50	Y	Y	Y	Y	4	Y	-	11	19	26	2	9	7	7	-	4	Y	6	Y	86	N, D		Y	Y	Y	-
	R5F64114	256	8	63	3.0	5.5	50	Y	Y	Y	Y	4	Y	-	11	19	26	2	9	7	7	-	4	Y	6	Y	86	N, D		Y	Y	Y	-
	R5F64115	384	8	63	3.0	5.5	50	Y	Y	Y	Y	4	Y	-	11	19	26	2	9	7	7	-	4	Y	6	Y	86	N, D		Y	Y	Y	-
	R5F64116	512	8	63	3.0	5.5	50	Y	Y	Y	Y	4	Y	-	11	19	26	2	9	7	7	-	4	Y	6	Y	86	N, D		Y	Y	Y	-
R32C/116	R5F64165	384	8	40	3.0	5.5	50	Y	Y	Y	Y	4	Y	-	11	24	34	2	9	7	7	-	4	Y	14	Y	122	N, D	Floating Point Unit (FPU), WDTO	-	-	Y	Y
	R5F64166	512	8	40	3.0	5.5	50	Y	Y	Y	Y	4	Y	-	11	24	34	2	9	7	7	-	4	Y	14	Y	122	N, D		-	-	Y	Y
	R5F64167	640	8	48	3.0	5.5	50	Y	Y	Y	Y	4	Y	-	11	24	34	2	9	7	7	-	4	Y	14	Y	122	N, D		-	-	Y	Y
	R5F64168	768	8	63	3.0	5.5	50	Y	Y	Y	Y	4	Y	-	11	24	34	2	9	7	7	-	4	Y	14	Y	122	N, D		-	-	Y	Y
	R5F64169	1024	8	63	3.0	5.5	50	Y	Y	Y	Y	4	Y	-	11	24	34	2	9	7	7	-	4	Y	14	Y	122	N, D		-	-	Y	Y
R32C/117	R5F64175	384	8	40	3.0	5.5	50	Y	Y	Y	Y	4	Y	-	11	24	34	2	9	7	7	1	4	Y	14	Y	122	N, D	Floating Point Unit (FPU), WDTO, CAN 2.0B (16-msg slots)	-	-	Y	Y
	R5F64176	512	8	40	3.0	5.5	50	Y	Y	Y	Y	4	Y	-	11	24	34	2	9	7	7	1	4	Y	14	Y	122	N, D		-	-	Y	Y
	R5F64177	640	8	48	3.0	5.5	50	Y	Y	Y	Y	4	Y	-	11	24	34	2	9	7	7	1	4	Y	14	Y	122	N, D		-	-	Y	Y
	R5F64178	768	8	63	3.0	5.5	50	Y	Y	Y	Y	4	Y	-	11	24	34	2	9	7	7	1	4	Y	14	Y	122	N, D		-	-	Y	Y
	R5F64179	1024	8	63	3.0	5.5	50	Y	Y	Y	Y	4	Y	-	11	24	34	2	9	7	7	1	4	Y	14	Y	122	N, D		-	-	Y	Y
R32C/118	R5F64187	640	8	48	3.0	5.5	50	Y	Y	Y	Y	4	Y	-	11	24	34	2	9	7	7	2	4	Y	14	Y	122	N, D	Floating Point Unit (FPU), WDTO, CAN 2.0B (16-msg slots)	-	-	Y	Y
	R5F64188	768	8	63	3.0	5.5	50	Y	Y	Y	Y	4	Y	-	11	24	34	2	9	7	7	2	4	Y	14	Y	122	N, D		-	-	Y	Y
	R5F64189	1024	8	63	3.0	5.5	50	Y	Y	Y	Y	4	Y	-	11	24	34	2	9	7	7	2	4	Y	14	Y	122	N, D		-	-	Y	Y

* Contact Renesas for product derivatives and availability.

Notes:

1. See Appendices for Part Number format
2. Some channels are shared. Check data sheet for details.
3. Refer to Appendices for details.

M16C Family MCUs for CAN Applications (Cross-Series)

M16C CAN Applications Line-up

Pins	R8C/22, /23, /34E, /34F (2.7 - 5.5 V)	M16C/29 (2.7 - 5.5 V)	M16C/6x (3.0 - 5.5V)	R32C/117, /118, /120, /121 (3.0 - 5.5V)
100-144 PINS			M16C/6N4, 5, K, L, M, N 128-512KB Flash 5-31KB RAM 1-2 CAN	R32C/117, /118 384-1024KB Flash* 40-63KB RAM 1-2 CAN Industrial R32C/120, /121 128-512KB Flash* 12-32KB RAM 1-2 CAN Automotive
64-80 PINS		M16C/29 32-128KB Flash 2-6KB RAM, 1 CAN		
48 PINS	R8C/22, /23 * 32-128KB Flash 2-6KB RAM 1 CAN R8C/34E, /34F * 32-128KB Flash 3-10KB RAM 1 CAN			

* Contact Renesas for product derivatives and availability.

Features

- Support for both CAN protocol versions 2.0A and 2.0B
- Controllers have 16 or 32 flexibly configurable mailboxes for efficient data management
- Acceptance filter support unit (ASU) is a hardware-based message prescreening mechanism for increased network rigidity and decreased CPU overhead
- CAN bus wake-up and low-power modes
- Forced bus-off restore function allows quick state recovery
- Manual retransmission abort function prevents retransmitting a message that is lost in arbitration, thus avoiding bus congestion
- Listen-only mode for node startup and communication analysis
- One-shot transmit or receive for immediate real-time messaging
- Field programmability (Flash programming) via CAN Bus

M16C CAN Roadmap

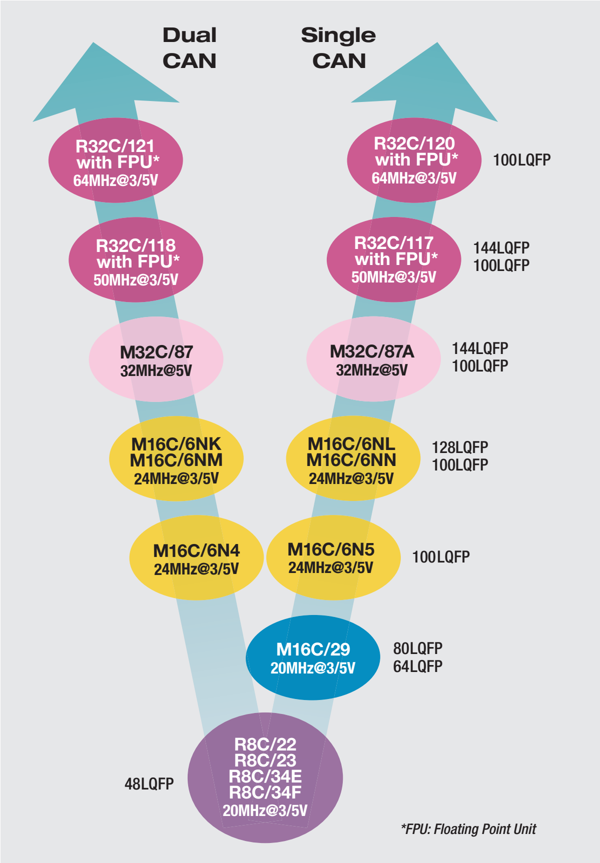

CAN Application Example: *Elevator Control*

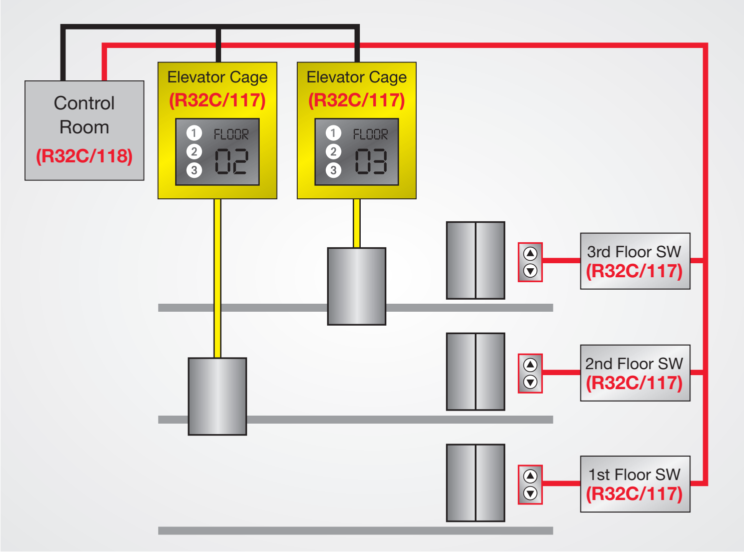

GET STARTED NOW!

CAN Development Kit
(includes free compiler)

Part Number: RCDK8C

M16C Family MCUs for CAN Applications: Selector Guide

Group	Catalog Part Number (See Note 1)	Flash (Kbytes)	Data Flash (Kbytes)	RAM (Kbytes)	Vcc min	Vcc max	max MHz @ Vcc max	On-chip Oscillator	Oscillation Stop Detect	32 kHz Sub Clock	Power On Reset / Low Voltage Detect	Power Down Modes	On chip Debug	DTC	Timers: 8-bit timers	Timers: 16-bit timers	Timers: Intelligent I/O	Analog: A/D 10-bit resolution	Analog: D/A 8-bit resolution	Comm. (Note 2): Serial (sync/async)	Comm. (Note 2): SPI Compatible	Comm. (Note 2): I2C	Comm. (Note 2): Hardware LIN	Comm. (Note 2): CAN	DMA Channels	DMAC-II	External Interrupts	External Data Bus	GPIO	Temp/ Grade Code (Note 3)	Special Features	Package: FP (PLQP0048KB-A, LQFP)	Package: HP PLQP0064KB-A, LQFP)	Package: HP (PLQP0080KB-A, LQFP)	Package: FB/GP (PLQP0100KB-A, LQFP)	Package: FP (PRQP0100JB-A, QFP)	Package: GP (PLQP0128KB-A, LQFP)	Package: FD (PLQP0144KA-A, LQFP)
R8C/22	R5F21226	32	-	2	2.7	5.5	20	Y	Y	-	Y	4	Y	-	3	2	-	12	-	2	1	1	1	1	-	-	6	-	44	N, D, J, K	1 ch CAN 2.0B (16-msg slots), SSU, WDT	Y	-	-	-	-	-	-
	R5F21227	48	-	3	2.7	5.5	20	Y	Y	-	Y	4	Y	-	3	2	-	12	-	2	1	1	1	1	-	-	6	-	44	N, D, J, K		Y	-	-	-	-	-	-
	R5F21228	64	-	3	2.7	5.5	20	Y	Y	-	Y	4	Y	-	3	2	-	12	-	2	1	1	1	1	-	-	6	-	44	N, D, J, K		Y	-	-	-	-	-	-
	R5F2122A	96	-	5	2.7	5.5	20	Y	Y	-	Y	4	Y	-	3	2	-	12	-	2	1	1	1	1	-	-	6	-	44	J, K		Y	-	-	-	-	-	-
	R5F2122C	128	-	6	2.7	5.5	20	Y	Y	-	Y	4	Y	-	3	2	-	12	-	2	1	1	1	1	-	-	6	-	44	J, K		Y	-	-	-	-	-	-
R8C/23	R5F21236	32	2	2	2.7	5.5	20	Y	Y	-	Y	4	Y	-	3	2	-	12	-	2	1	1	1	1	-	-	6	-	44	N, D, J, K	1 ch CAN 2.0B (16-msg slots), SSU, WDT	Y	-	-	-	-	-	-
	R5F21237	48	2	3	2.7	5.5	20	Y	Y	-	Y	4	Y	-	3	2	-	12	-	2	1	1	1	1	-	-	6	-	44	N, D, J, K		Y	-	-	-	-	-	-
	R5F21238	64	2	3	2.7	5.5	20	Y	Y	-	Y	4	Y	-	3	2	-	12	-	2	1	1	1	1	-	-	6	-	44	N, D, J, K		Y	-	-	-	-	-	-
	R5F2123A	96	2	5	2.7	5.5	20	Y	Y	-	Y	4	Y	-	3	2	-	12	-	2	1	1	1	1	-	-	6	-	44	J, K		Y	-	-	-	-	-	-
	R5F2123C	128	2	6	2.7	5.5	20	Y	Y	-	Y	4	Y	-	3	2	-	12	-	2	1	1	1	1	-	-	6	-	44	J, K		Y	-	-	-	-	-	-
R8C/34F *	R5F21346F	32	-	3	2.7	5.5	20	Y	Y	-	Y	4	Y	Y	3	3	-	12	-	3	1	2	1	1	-	-	9	-	44	J, K	1 ch CAN 2.0B (16-msg slots), SSU, WDT	Y	-	-	-	-	-	-
	R5F21347F	48	-	4	2.7	5.5	20	Y	Y	-	Y	4	Y	Y	3	3	-	12	-	3	1	2	1	1	-	-	9	-	44	J, K		Y	-	-	-	-	-	-
	R5F21348F	64	-	6	2.7	5.5	20	Y	Y	-	Y	4	Y	Y	3	3	-	12	-	3	1	2	1	1	-	-	9	-	44	J, K		Y	-	-	-	-	-	-
	R5F2134AF	96	-	8	2.7	5.5	20	Y	Y	-	Y	4	Y	Y	3	3	-	12	-	3	1	2	1	1	-	-	9	-	44	J, K		Y	-	-	-	-	-	-
	R5F2134CF	128	-	10	2.7	5.5	20	Y	Y	-	Y	4	Y	Y	3	3	-	12	-	3	1	2	1	1	-	-	9	-	44	J, K		Y	-	-	-	-	-	-
R8C/34E *	R5F21346E	32	4	3	2.7	5.5	20	Y	Y	-	Y	4	Y	Y	3	3	-	12	-	3	1	2	1	1	-	-	9	-	44	J, K	1 ch CAN 2.0B (16-msg slots), SSU, WDT, BGO	Y	-	-	-	-	-	-
	R5F21347E	48	4	4	2.7	5.5	20	Y	Y	-	Y	4	Y	Y	3	3	-	12	-	3	1	2	1	1	-	-	9	-	44	J, K		Y	-	-	-	-	-	-
	R5F21348E	64	4	6	2.7	5.5	20	Y	Y	-	Y	4	Y	Y	3	3	-	12	-	3	1	2	1	1	-	-	9	-	44	J, K		Y	-	-	-	-	-	-
	R5F2134AE	96	4	8	2.7	5.5	20	Y	Y	-	Y	4	Y	Y	3	3	-	12	-	3	1	2	1	1	-	-	9	-	44	J, K		Y	-	-	-	-	-	-
	R5F2134CE	128	4	10	2.7	5.5	20	Y	Y	-	Y	4	Y	Y	3	3	-	12	-	3	1	2	1	1	-	-	9	-	44	J, K		Y	-	-	-	-	-	-
M16C/29	M30290F	96	-	8	2.7	5.5	20	Y	Y	Y	Y	4	Y	-	-	9	-	27	-	5	5	2	-	1	2	-	8	-	71	T, V	1 ch CAN 2.0B (16-msg slots), 3-ph PWM, CRC, 1-ch IC/OC	-	Y	Y	-	-	-	-
	M30291F	128	-	12	2.7	5.5	20	Y	Y	Y	Y	4	Y	-	-	9	-	27	-	5	5	2	-	1	2	-	8	-	71	T, V		-	Y	Y	-	-	-	-
M16C/6N4	M306N4FC	128	4	5	3.0	5.5	24	Y	Y	-	Y	4	Y	-	-	11	-	26	2	4	1	3	-	2	2	-	9	Y	88	T, V	1 or 2 ch CAN 2.0B (16-msg slots/ 1ch), POR, 3-phase PWM, CRC	-	-	-	Y	Y	-	-
	M306N4FG	256	4	10	3.0	5.5	24	Y	Y	-	Y	4	Y	-	-	11	-	26	2	4	1	3	-	2	2	-	9	Y	88	T, V		-	-	-	Y	Y	-	-
M16C/6N5	R5F21346E	128	4	5	3.0	5.5	24	Y	Y	-	Y	4	Y	-	-	11	-	26	2	4	1	3	-	1	2	-	9	Y	88	T, V		-	-	-	Y	Y	-	-
M16C/6NK	R5F21346E	384	4	31	3.0	5.5	24	Y	Y	-	Y	4	Y	-	-	11	-	26	2	5	1	3	-	2	2	-	9	-	88	T, V		-	-	-	Y	-	-	-
	R5F21347E	512	4	31	3.0	5.5	24	Y	Y	-	Y	4	Y	-	-	11	-	26	2	5	1	3	-	2	2	-	9	-	88	T, V		-	-	-	Y	-	-	-
M16C/6NL	R5F21346E	384	4	31	3.0	5.5	24	Y	Y	-	Y	4	Y	-	-	11	-	26	2	5	1	3	-	1	2	-	9	-	88	T, V		-	-	-	Y	-	-	-
	R5F21347E	512	4	31	3.0	5.5	24	Y	Y	-	Y	4	Y	-	-	11	-	26	2	5	1	3	-	1	2	-	9	-	88	T, V		-	-	-	Y	-	-	-
M16C/6NM	R5F21346E	384	4	31	3.0	5.5	24	Y	Y	-	Y	4	Y	-	-	11	-	26	2	7	1	3	-	2	2	-	12	-	114	T, V		-	-	-	-	-	Y	-
	R5F21347E	512	4	31	3.0	5.5	24	Y	Y	-	Y	4	Y	-	-	11	-	26	2	7	1	3	-	2	2	-	12	-	114	T, V		-	-	-	-	-	Y	-
M16C/6NN	R5F21346E	384	4	31	3.0	5.5	24	Y	Y	-	Y	4	Y	-	-	11	-	26	2	7	1	3	-	1	2	-	12	-	114	T, V		-	-	-	-	-	Y	-
	R5F21347E	512	4	31	3.0	5.5	24	Y	Y	-	Y	4	Y	-	-	11	-	26	2	7	1	3	-	1	2	-	12	-	114	T, V		-	-	-	-	-	Y	-
R32C/117	R5F64175	384	8	40	3.0	5.5	50	Y	Y	Y	Y	4	Y	-	-	11	24	34	2	9	7	7	-	1	4	Y	14	Y	122	N, D	Floating Point Unit (FPU), WDTO, CAN 2.0B (16-msg slots)	-	-	-	Y	-	-	Y
	R5F64176	512	8	40	3.0	5.5	50	Y	Y	Y	Y	4	Y	-	-	11	24	34	2	9	7	7	-	1	4	Y	14	Y	122	N, D		-	-	-	Y	-	-	Y
	R5F64177	640	8	48	3.0	5.5	50	Y	Y	Y	Y	4	Y	-	-	11	24	34	2	9	7	7	-	1	4	Y	14	Y	122	N, D		-	-	-	Y	-	-	Y
	R5F64178	768	8	63	3.0	5.5	50	Y	Y	Y	Y	4	Y	-	-	11	24	34	2	9	7	7	-	1	4	Y	14	Y	122	N, D		-	-	-	Y	-	-	Y
	R5F64179	1024	8	63	3.0	5.5	50	Y	Y	Y	Y	4	Y	-	-	11	24	34	2	9	7	7	-	1	4	Y	14	Y	122	N, D		-	-	-	Y	-	-	Y
R32C/118	R5F64187	640	8	48	3.0	5.5	50	Y	Y	Y	Y	4	Y	-	-	11	24	34	2	9	7	7	-	2	4	Y	14	Y	122	N, D	Floating Point Unit (FPU), WDTO, CAN 2.0B (32-msg slots)	-	-	-	Y	-	-	Y
	R5F64188	768	8	63	3.0	5.5	50	Y	Y	Y	Y	4	Y	-	-	11	24	34	2	9	7	7	-	2	4	Y	14	Y	122	N, D		-	-	-	Y	-	-	Y
	R5F64189	1024	8	63	3.0	5.5	50	Y	Y	Y	Y	4	Y	-	-	11	24	34	2	9	7	7	-	2	4	Y	14	Y	122	N, D		-	-	-	Y	-	-	Y
R32C/121	R5F64210	128	8	12	3.0	5.5	64	Y	Y	Y	Y	4	Y	-	-	11	-	26	2	5	3	3	2	2	4	Y	14	-	86	J, K, L	Floating Point Unit (FPU), WDTO, CAN 2.0B (32-msg slots), 2 LIN 2.1	-	-	-	Y	-	-	-
	R5F64211	256	8	20	3.0	5.5	64	Y	Y	Y	Y	4	Y	-	-	11	-	26	2	5	3	3	2	2	4	Y	14	-	86	J, K, L		-	-	-	Y	-	-	-
	R5F64212	384	8	24	3.0	5.5	64	Y	Y	Y	Y	4	Y	-	-	11	-	26	2	5	3	3	2	2	4	Y	14	-	86	J, K, L		-	-	-	Y	-	-	-
	R5F64213	512	8	32	3.0	5.5	64	Y	Y	Y	Y	4	Y	-	-	11	-	26	2	5	3	3	2	2	4	Y	14	-	86	J, K, L		-	-	-	Y	-	-	-

* Contact Renesas for product derivatives and availability.

Notes:

1. See Appendices for Part Number format
2. Some channels are shared. Check data sheet for details.
3. Refer to Appendices for details.

Appendix A-1: Nomenclature of R8C, M16C, and R32C Part Numbers (1 of 2)

R5 F 21 25 x 6 S D XXX FP #XX

Field	Segment
R5	**Product Classification**
F	**ROM Type** F: Flash Memory
21	**Product Series** 21: R8C/2x, 3x 3: M16C/60 2L: R8C/Lx 64: R32C/100
25	**Product Group** Examples: "25" for R8C/25 "65" for M16C/65 "11" for R32C/111
x	**Number of Pins (optional)** 0: 100 pins 1: 128 pins 2: 80 pins
6	**Program Flash Memory Size** Example '0' : 2KB for R8C Example '6' : 128KB for M16C Example '0' : 256KB for R32C
S	**Product Version (optional)** S: Low-voltage A: High Performance
D	**Temperature/Grade Classification** N: -20 to +85°C (consumer) D: -40 to +85°C (industrial) J: -40 to +85°C (automotive) L: -40 to +105°C (automotive) K: -40 to +125°C (automotive)
XXX	**ROM Code Assignment (optional)**
FP	**Package Type** Example: "FP" for LQFP
#XX	**Production Type:** #U0: Lead-free, Bulk* #W4: Lead-free, Tape & Reel

* #U1 for R8C/22, R8C/23 J/K Grade; Lead-free; Bulk

Appendix A-2: Nomenclature of M16C/Tiny and M16C/6x Part Numbers (2 of 2)

M 30 6 20 F C A T (-XXX) FP

- **M** — Classification Code
- **30** — M16C Microcontroller Family Platform
- **6** — M16C Series: 2: 2x; 6: 6x; 8: 8x. M32C Series: 8: 8x; 9: 9x
- **20** — M16C Group / M32C Group:

M16C Group:		M32C Group:	
K2 - K7:	LPC	00: 80	
N0 - N5:	CAN	10 - 12:	81
NK - NN:	CAN	23 - 28:	82
00 - 02:	10	33 - 35:	83
00 - 01:	28	40 - 45:	84
00 - 05:	80	50 - 53:	85; 95
10 - 25:	62	65:	86
		73-79, 7B:	87
		80-82:	88

- **F** — ROM Type: F: Flash; M: Mask; S: Romless
- **C** — ROM Size (KB):

3: 24	6: 48	C: 128	H: 384
4: 32	8: 64	E: 192	J: 512
5: 40	A: 96	G: 256	

- **A** — Die rev.
- **T** — Temperature Range
  - Blank: General Industrial Use
  - T/U/V: Automotive grade; extended temp. operation
    - T: -40 to +85°C
    - U: -40 to +105°C
    - V: -40 to +125°C
- **(-XXX)** — ROM Code (Mask ROM version)
- **FP** — Package Style

		Program/Erase Specification				Read Specification
		Main Flash		Data Flash		Main Flash and Data Flash
	Lead-free suffix options	Endurance	Temp. Range	Endurance	Temp. Range	Temp. Range
M16C/Tiny and M16C/62P	#U3	100	0 to 60°C	100	0 to 60°C	-40 to 85°C
	#U5	100	0 to 60°C	100	0 to 60°C	-20 to 85°C
	#U7	1000	0 to 60°C	10000	-40 to 85°C	-40 to 85°C
	#U9	1000	0 to 60°C	10000	-20 to 85°C	-20 to 85°C
R8C	#U0	1000	0 to 60°C	10000	-20 to 85°C	-20 to 85°C

Appendix B: Abbreviations

5V IO	Contains I/O pins that are 5V tolerant
ADC	Analog-to-Digital Converter
BGO	BackGround Operation
CAN	Controller Area Network
CISC	Complex Instruction Set Computer
CRC	Cyclic Redundancy Check Generator
DAC	Digital to Analog Converter
DMAC	Direct Memory Access Controller
DRAMC	DRAM Controller
DTC	Data Transfer Controller
Dual Vcc IO	Two Vcc domains for I/O Ports
EMI	Electro-Magnetic Interference
EMS	Electro-Magnetic Susceptibility
FLG	Flag
FPU	Floating Point Unit
I^2C	Inter IC Bus
IC	Input Capture
IC/OC	Input Capture/Output Compare
IEBus™	Inter-Equipment Bus
IrDA	Infrared Serial Port
ITO	Interval Timer Operation
LIN	Local Interconnect Network
LPC	Low-Pin-Count Interface Bus

LVD	Low-Voltage Detect
MRAM	Magnetic Random Access Memory
OCD	On-Chip Debug
OCO	On-Chip Oscillator
PC	Program Counter
PC Break	PC Break Controller
PLL	Phase-Lock Loop
POR	Power-On Reset
PWM	Pulse Width Modulation
RAM	Random Access Memory
RISC	Reduced Instruction Set Computer
ROM	Read Only Memory
RTC	Real-Time Clock
RX	Renesas Extreme
SDRAM	SDRAM Bus Controller
SIM	Subscriber Identity Module
SPI™	Serial Peripheral Interface
SSU	Synchronous Serial Unit (SPI compatible)
SVP	Save PC Register
SVF	Save Flag Register
WDTO	Enhanced Watchdog Timer

I^2C is a trademark of Philips. SPI is a trademark of Freescale.
IEBus is a trademark of NEC Electronics Corporation.

Appendix C: Package Specifications

Type	Renesas Package Code	Previous Code	Nominal Body Pin Count	Lead Dimensions (mm)	Mounting Pitch (mm)	Height (mm)
LSSOP **(Low-profile Small Outline Package)**	PLSP0020JB-A	20P2F-A	20	4.4 x 6.5	0.65	1.45
SDIP **(Shrink Dual Inline Package)**	PRDP0020BA-A	20P4B	20	6.3 x 19	1.78	4.50
SSOP **(Shrink Small Outline Package)**	PRSP0042GA-B	42P2R-E	42	17.5 x 8.4	0.8	2.40
QFP **(Quad Flat Package)**	PRQP0080JA-A	80P6S-A	80	14 x 14	0.65	3.05
	PRQP0100JD-B	100P6F-A	100	14 x 20	0.65	3.05
	PRQP0100JB-A	100P6S-A	100	14 x 20	0.65	3.05
LQFP **(Low-Profile Quad Flat Package)**	PLQP0032GB-A	32P6U-A	32	7 x 7	0.8	1.70
	PLQP0048KB-A	48P6Q-A	48	7 x 7	0.5	1.70
	PLQP0052JA-A	52P6A-A	52	10 x 10	0.65	1.70
	PLQP0064GA-A	64P6U-A	64	14 x 14	0.8	1.70
	PLQP0064KB-A	64P6Q-A	64	10 x 10	0.5	1.70
	PLQP0080KB-A	80P6Q-A	80	12 x 12	0.5	1.70
	PLQP0100KB-A	100P6Q-A	100	14 x 14	0.5	1.70
	PLQP0128KB-A	128P6Q-A	128	14 x 20	0.5	1.70
	PLQP0144KA-A	144P6Q-A	144	20 x 20	0.5	1.70
TQFP **(Thin Quad Flat Package)**	PTQP0080KC-A	TFP-80C	80	12 x 12	0.5	1.20
TFLGA **(Thin Fine-pitch Land Grid Array)**	PTLG0064JA-A	64F0G	64	6 x 6	0.65	1.05
	PTLG0085JB-A	85F0G	85	7 x 7	0.65	1.05
QFN **(Quad Flat Non-lead Package)**	PWQN0028KA-B	28PJW-B	28	5 x 5	0.5	0.80
	PWQN0024KB-A	N/A	24	4 x 4	0.5	0.80

Order M16C Family Products Online Quickly and Hassle-free

Users can order M16C microcontroller devices and development tools online with just a few clicks on Renesas' website.

Here's how:

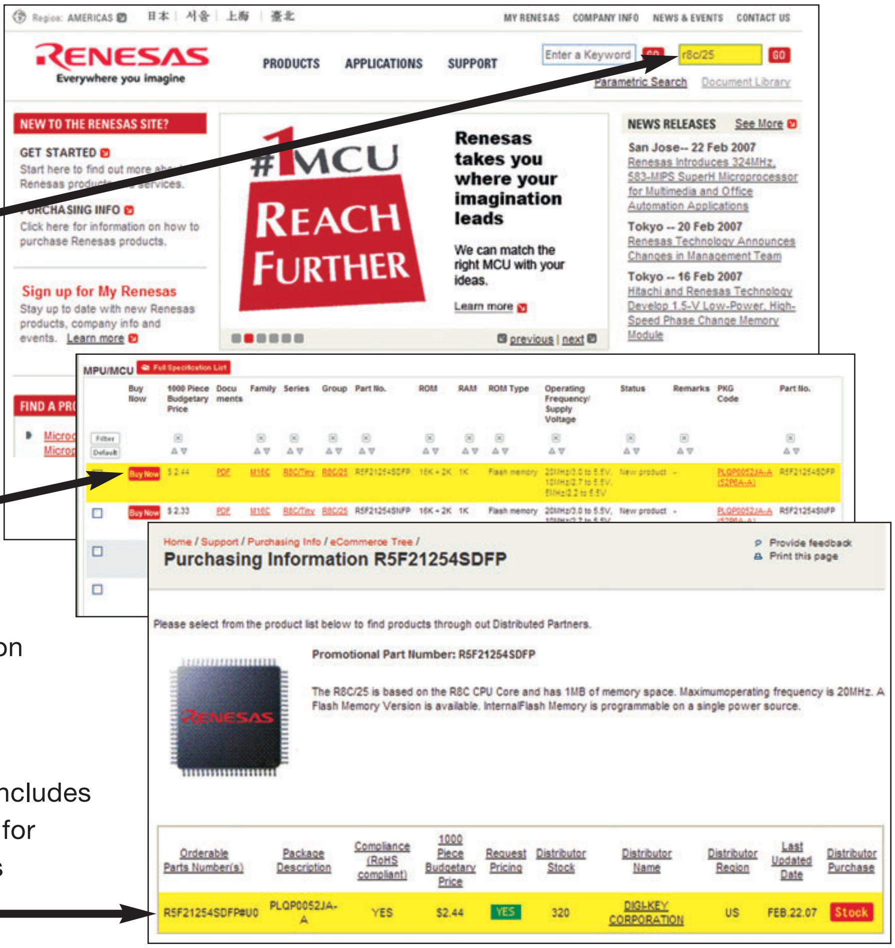

1 From the Renesas website, in the Part Number search, enter the Series name (example: R8C/25)

2 Locate the required part number and click on Buy Now button

3 Purchasing information includes pricing and availability for MCU and related tools

Renesas Interactive — Your Online Environment for Semiconductor Device Research, Evaluation and Application

Renesas Interactive is a valuable FREE online evaluation service that lets you work at your own pace, whenever it is most convenient to do so.

- Take an online interactive training course and learn about the details of Renesas MCU product architectures and peripheral functions, as well as hardware and software development tools.

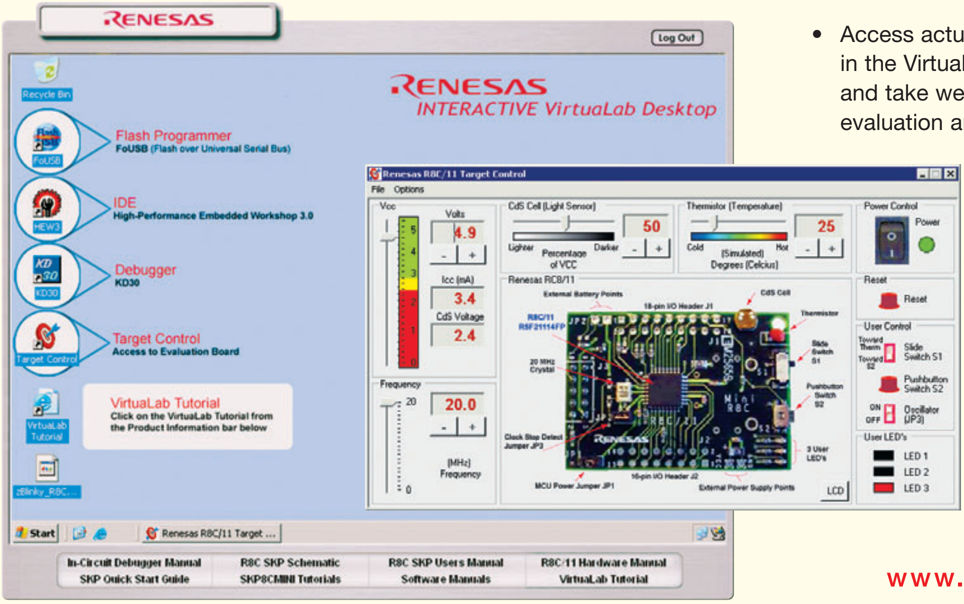

- Access actual hardware, software and tools in the Virtual Lab Development Environment and take weeks off your MCU assessment, evaluation and setup process.
- Watch live or archived webcasts and find out about new Renesas technology, products and services.

Renesas INTERACTIVE

www.renesasinteractive.com

RenesasTechnology

www.america.renesas.com

© 2008 Renesas Technology America, Inc. Renesas Technology America, Inc. is a wholly owned subsidiary of Renesas Technology Corp. H8 and SuperH are registered trademarks of Renesas Technology Corp. M16C, M16C Platform and R8C are trademarks of Renesas Technology Corp. All other trademarks are the property of their respective holders. The information supplied by Renesas Technology America, Inc. is believed to be accurate and reliable, but in no event shall Renesas Technology America, Inc. be liable for any damages whatsoever arising out of the use or inability to use the information or any errors that may appear in this publication. The information is provided as is without any warranties of any kind, either express or implied. Renesas Technology America, Inc. reserves the right, without notice, to make changes to the information or to the design and specifications of its hardware and/or software products. Products subject to availability. Printed in U.S.A.

Printed on Recycled Paper 0908/10K/JP/PF/SP Order Number: REU01B0032-0101